NOTES:

1. TO INSPECT ASSEMBLY, FOLLOW FIRST ARTICLE AND IN PROCESS INSPECTION SHEET.

2 SLIT O-RING, BEFORE INSTALLING.

3 INSTALLATION TORQUE: 11 - 14 LB-FT

4 ASSEMBLY SHALL BE WATER TESTED.

5 BAG 5-007 IN A SEPARATE BAG.

6 CUT O-RING, TO .20" (SHORTEN BY .13") BEFORE INSTALLING.

7 APPLY LOCTITE 242.

8 APPLY THIN FILM OF DOW CORNING 111.

9 APPLY LOCTITE 680.

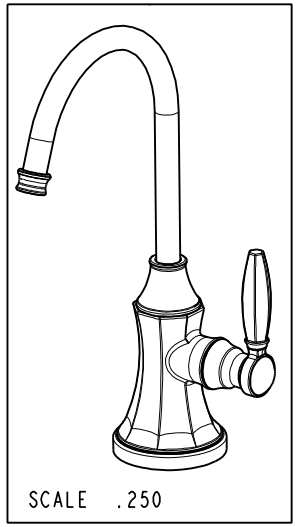

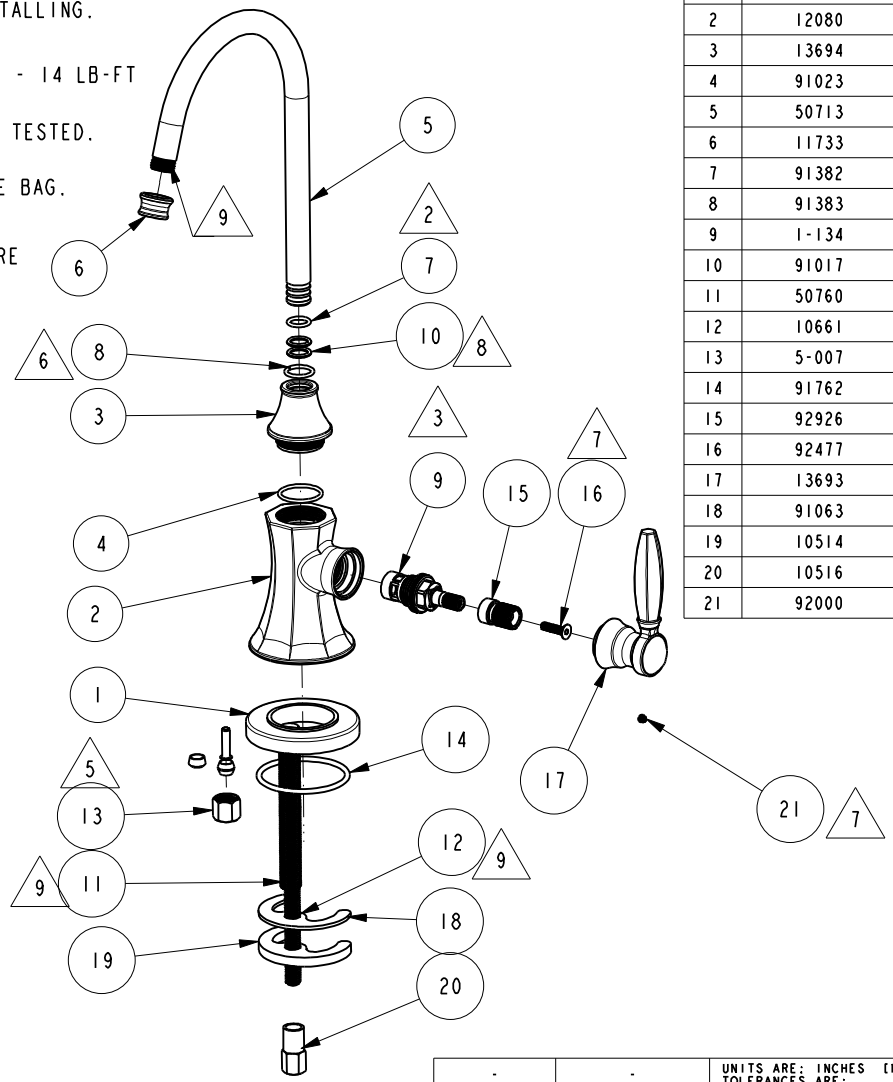

BILL OF MATERIAL (CURRENT LEVEL)

ITEM	PT/ASSY	DESCRIPTION	TYPE	QTY.
1	12077	ESCUTCHEON	PART	1
2	12080	WATER DISPENSER BODY, COLD	PART	1
3	13694	WATER DISPENSER BODY CAP	PART	1
4	91023	O-RING, #2- 019, EPDM, 65-75 DURO, NSF 61	PART	1
5	50713	SPOUT, WATER DISP. (TRAD.)	PART	1
6	11733	SHELL, SPOUT, WATER DISP	PART	1
7	91382	O-RING, #2- 012, TEFLON,	PART	1
8	91383	O-RING, #2- 014, TEFLON, NSF 61	PART	1
9	1-134	CARTR 3/8 HOT 1/4 TR	PART	1
10	91017	O-RING #2-012	PART	2
11	50760	NIPPLE WATER DISP	PART	1
12	10661	MOUNTING STUD	PART	1
13	5-007	1/4 COMP KIT	ASSEMBLY	1
14	91762	O-RING, #2-132, EP, 50 DURO - GREY	PART	1
15	92926	ADAPTER	PART	1
16	92477	SCRW, M4 X 16 SKT FLT HD SS	PART	1
17	13693	HANDLE	PART	1
18	91063	MOUNTING CRESCENT GASKET	PART	1
19	10514	MOUNTING CRESCENT	PART	1
20	10516	MOUNTING NUT	PART	1
21	92000	SCREW 8 - 32 X 1/8 SS	PART	1

ZONE	REV	DESCRIPTION	DATE	APPROVED
-	G	EN-4187	10/25/22	J.M.
-	E	EN-4300jj	04/12/21	R.S.
-	D	EN-3722	02/08/19	C.G.
-	C	EN-2547	06/07/13	-
-	B	EN-2412	01/11/13	-
-	A	EN-2319	10/16/12	-
-	-	EN-2289	06/12/12	-

COPYRIGHT 2005 BRASSTECH, INC. THESE DRAWINGS AND THE DESIGNS DEPICTED HEREIN ARE THE PROPRIETARY PROPERTY OF BRASSTECH. ANY USE OR REPRODUCTION IS SUBJECT TO THE EXPRESS APPROVAL OF BRASSTECH. UNAUTHORIZED USE IS STRICTLY PROHIBITED. ALL RIGHTS RESERVED.

TESTING	-	-	-
ASSEMBLY	-	-	-
PLATING	-	-	-
POLISHING	-	NEXT ASSY	USED ON
MACHINING	-	APPLICATION	
TOOLING FIXTURE #		REMOVE ALL BURRS AND SHARP EDGES	

UNITS ARE: INCHES [MM]
TOLERANCES ARE:
FRACTIONS ±1/16" DECIMALS .X ±.1 [2,5] .XX ±.06 [1,5] ANGLES ±1°
(X.XXX) DENOTES CRITICAL DIMS.
ALL THREADS ARE CRITICAL

DRAWN	JINSON	10/25/22
CHECKED	G.B.	10/25/22
APPROVED	J.M.	10/25/22

BRASSTECH INCORPORATED
2001 CARNEGIE AVE.
SANTA ANA, CA 92705
(949) 417-5207

METROPOLE COLD WATER DISPENSER

DWG NO. 1200-5623 REV G

SCALE .250 REF. - SHEET 1 OF 2

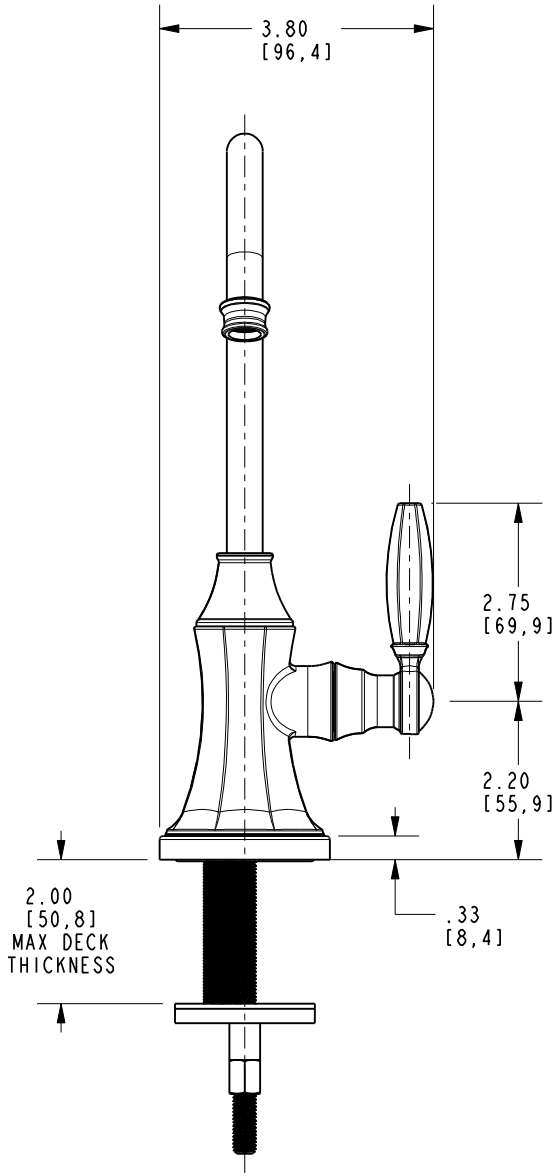

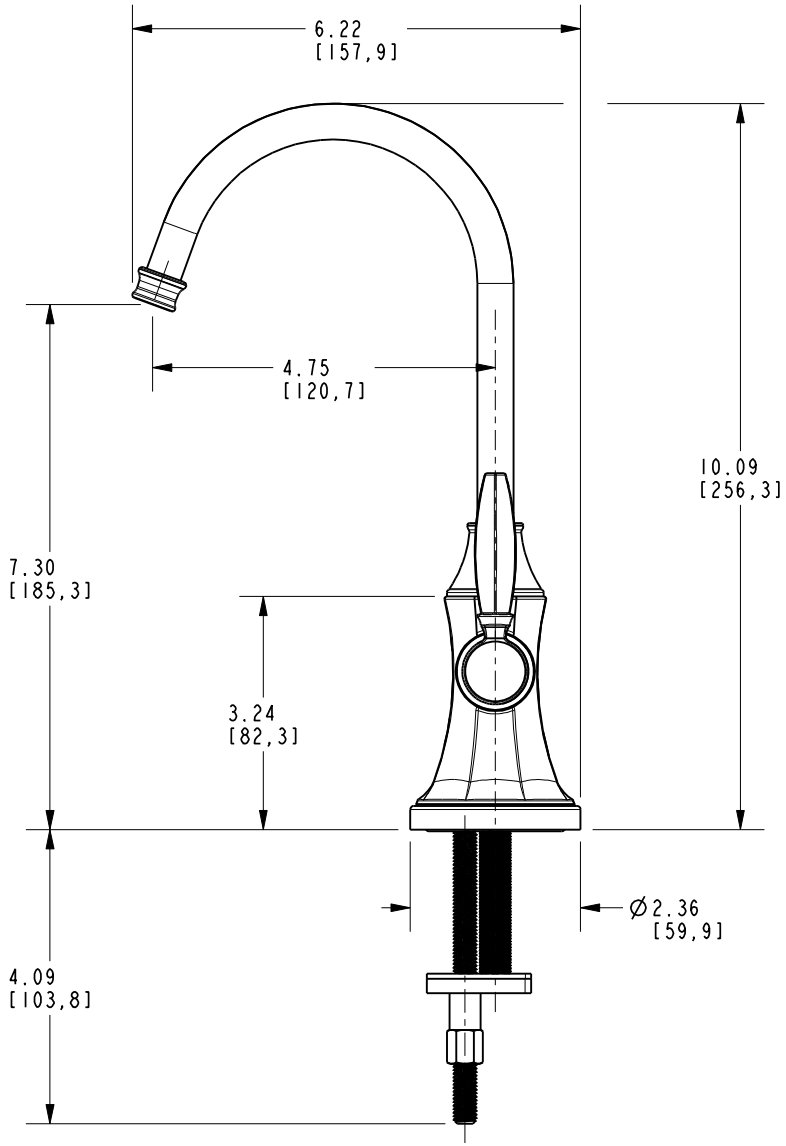

BRASSTECH INCORPORATED
2001 E. CARNEGIE AVE.
SANTA ANA, CA 92705
(949) 417-5207

DWG NO.	REV
1200-5623	G

SCALE	REF.	SHEET
.375	-	2 OF 2