NOTES:

1. TO INSPECT ASSEMBLY, FOLLOW FIRST ARTICLE AND IN PROCESS INSPECTION SHEET.

2. SEAL NUT 10259 IN A PLASTIC BAG AND TAPE TO THE BACK OF THE TRIM PLATE.

BILL OF MATERIAL (CURRENT LEVEL)

ITEM	PT/ASSY	DESCRIPTION	TYPE	QTY.
1	2-225	BP COVER PLATE FOR SHOWER	ASSEMBLY	1
2	3-289	TRIM KIT HDL/ESC	ASSEMBLY	1
3	206	SHOWER ARM FLANGE	PART	1
4	200	SHOWER ARM 6" BRASS	PART	1
5	2156	SHOWER HEAD, TRAD	ASSEMBLY	1
6	10259	HEX NUT 9/16 X 20 MADE	PART	1

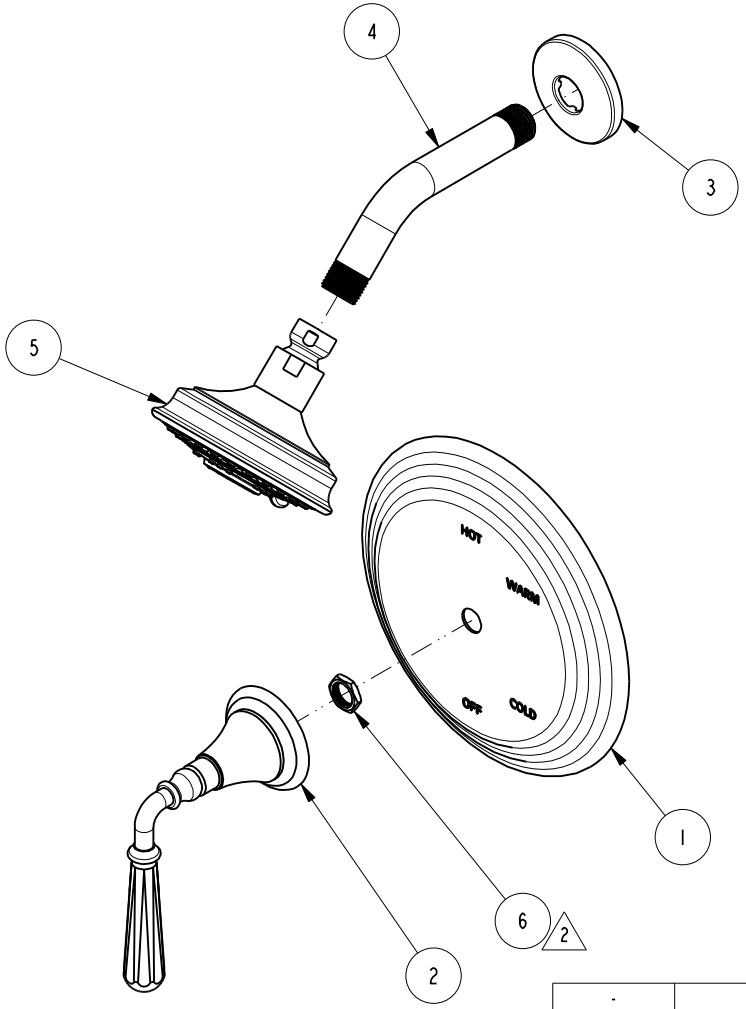

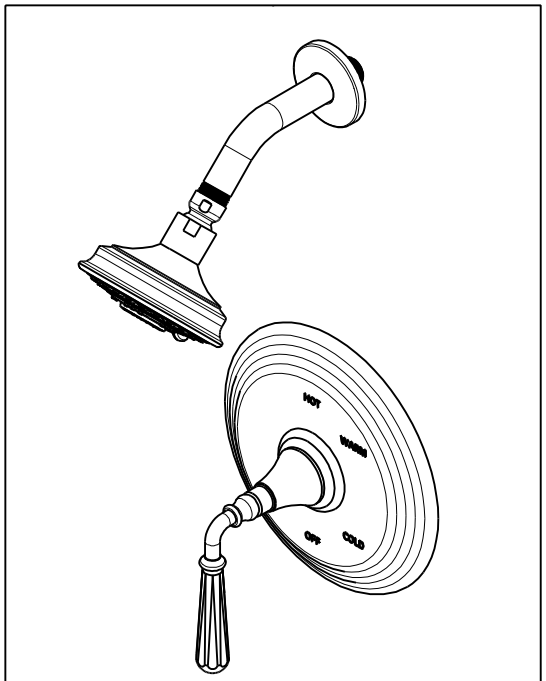

SCALE .200

Ned M. Santos Digitally signed by Ned M. Santos Date: 2022.06.27 13:23:34 -07'00'

ZONE	REV	DESCRIPTION	DATE	APPROVED
-	D	EN-4441	04/18/22	N.S.
-	C	EN-4300e	04/28/21	R.S.
-	B	EN-2802	09/05/14	-
-	A	EN-1745	08/22/11	-
-	-	EN-1183	03/23/09	-

COPYRIGHT 2005 BRASSTECH, INC. THESE DRAWINGS AND THE DESIGNS DEPICTED HEREIN ARE THE PROPRIETARY PROPERTY OF BRASSTECH. ANY USE OR REPRODUCTION IS SUBJECT TO THE EXPRESS APPROVAL OF BRASSTECH. UNAUTHORIZED USE IS STRICTLY PROHIBITED. ALL RIGHTS RESERVED.

TESTING	-	-	-
ASSEMBLY	-	-	-
PLATING	-	-	-
POLISHING	-	NEXT ASSY	USED ON
MACHINING	-	APPLICATION	
TOOLING FIXTURE #		REMOVE ALL BURRS AND SHARP EDGES	

UNITS ARE: INCHES [MM]
TOLERANCES ARE:
FRACTIONS ±1/16" DECIMALS .X ±.1 [2,5] .XX ±.06 [1,5] ANGLES ±1°
(X.XXX) DENOTES CRITICAL DIMS.
ALL THREADS ARE CRITICAL

DRAWN	J.T.	04/18/22
CHECKED	N.S.	04/18/22
APPROVED	N.S.	04/18/22

BRASSTECH INCORPORATED
2001 CARNEGIE AVE.
SANTA ANA, CA 92705
(949) 417-5207

TRIM KIT SHOWER BP, 3-1744BP

DWG NO. 3-1744BP REV D

SCALE .250 REF. - SHEET 1 OF 2

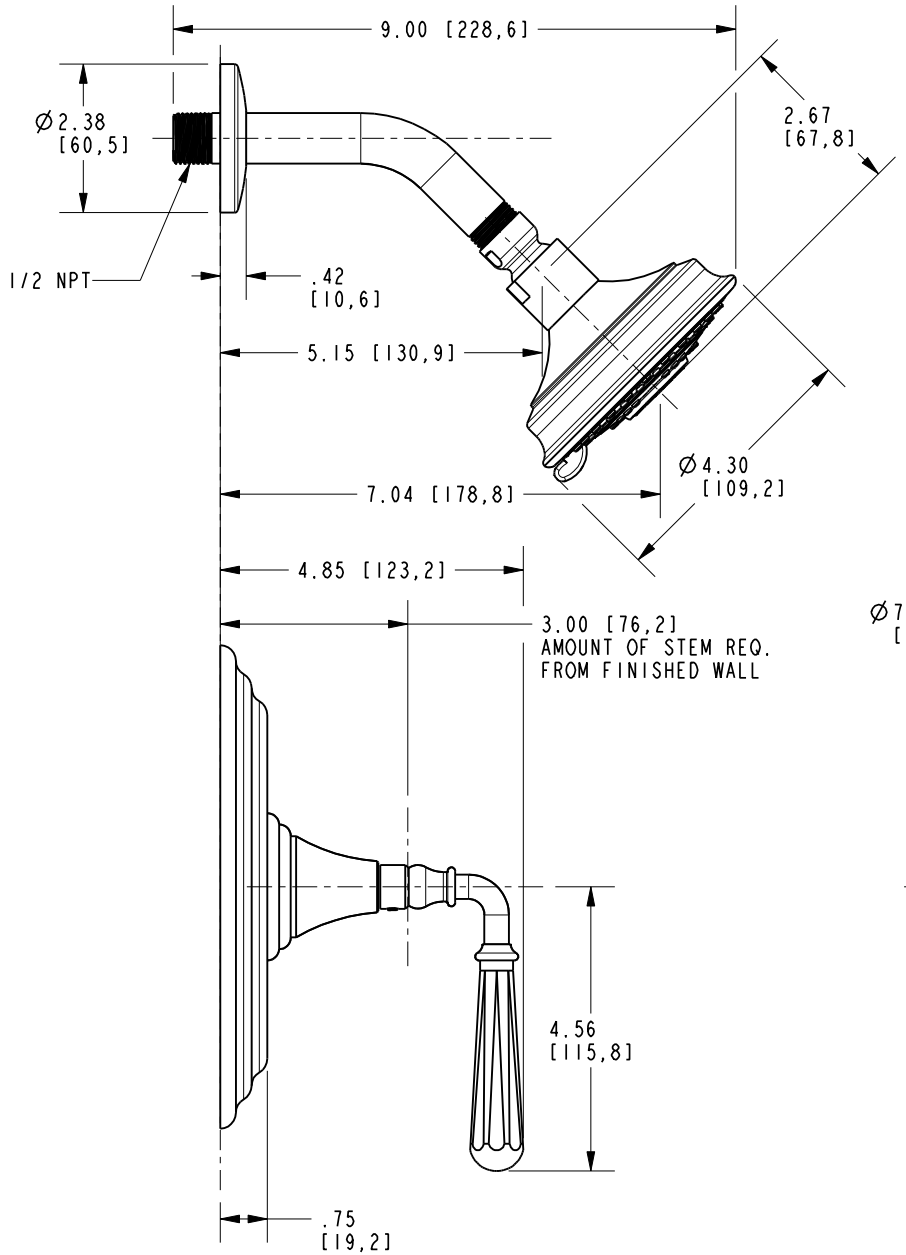

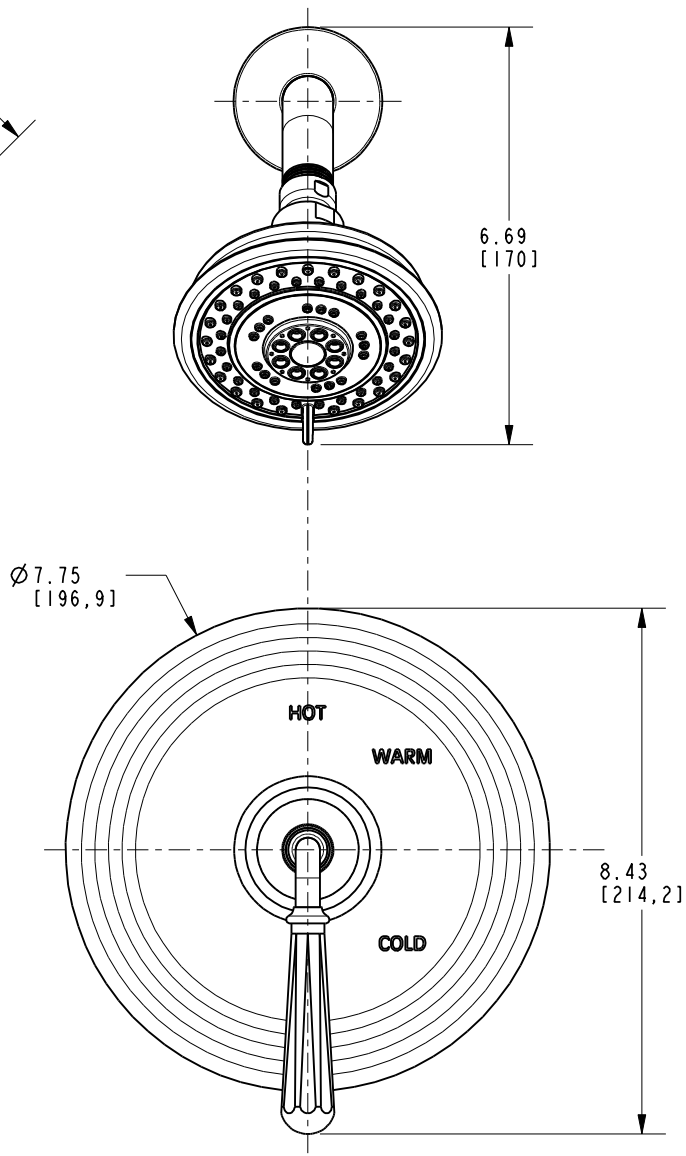

BRASSTECH INCORPORATED

2001 E. CARNEGIE AVE.
SANTA ANA, CA 92705
(949) 417-5207

DWG NO.	REV
3-1744BP	D

SCALE	REF.	SHEET
.325	-	2 OF 2