NOTES:

1. TO INSPECT ASSEMBLY, FOLLOW FIRST ARTICLE AND IN PROCESS INSPECTION SHEET.

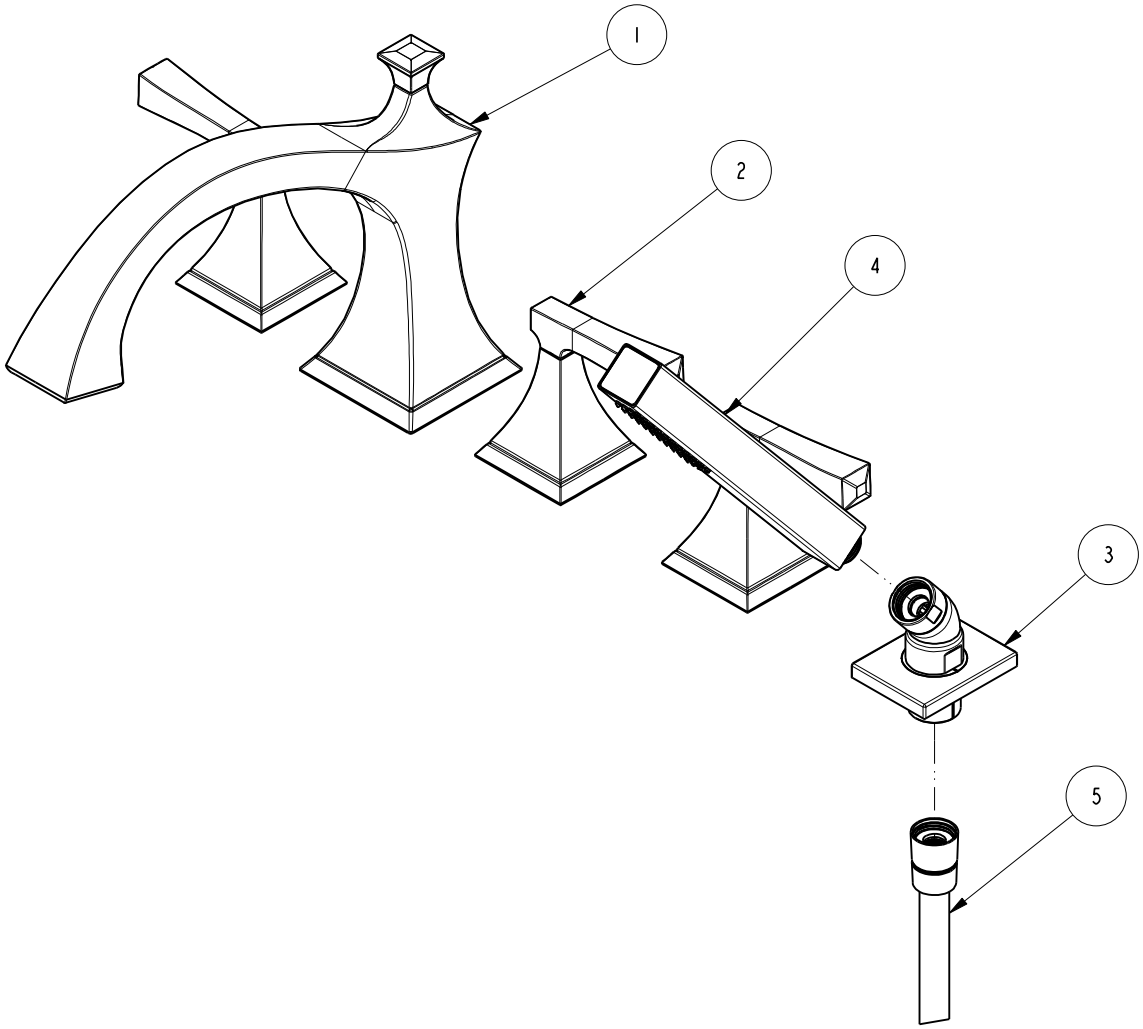


## BILL OF MATERIAL (CURRENT LEVEL)

| ITEM | PT/ASSY | DESCRIPTION | TYPE | QTY. |
|---|---|---|---|---|
| 1 | 20-129 | R/T SPOUT ASM | ASSEMBLY | 1 |
| 2 | 3-594 | LEVER HANDLE W/ESC. | ASSEMBLY | 3 |
| 3 | 6-289-4 | DECK FLANGE TRIM | ASSEMBLY | 1 |
| 4 | 283-102 | SQUARE WAND HANDSHOWER | ASSEMBLY | 1 |
| 5 | 284 | 59 IN. SPIRAL SHOWER HOSE | ASSEMBLY | 1 |

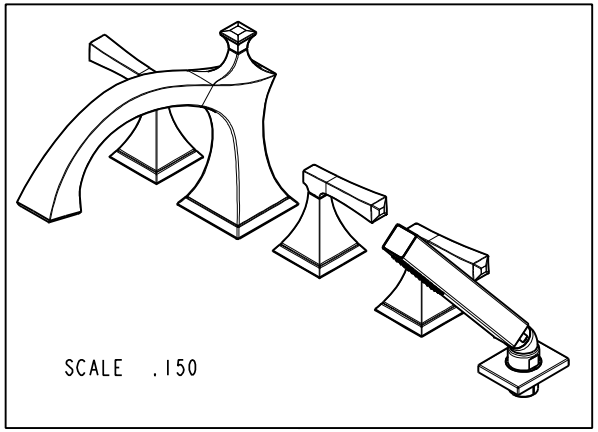


| ZONE | REV | DESCRIPTION | DATE | APPROVED |
|---|---|---|---|---|
| - | E | EN-4300u | 02/02/21 | R.S. |
| - | D | EN-3397 | 06/01/18 | J.A. |
| - | C | EN-3185 | 11/09/16 | R.S |
| - | B | EN-3102 | 07/26/16 | J.M. |
| - | A | EN-3082 | 06/21/16 | J.M. |
| - | - | EN-2367b | 05/26/15 | J.M |

Ray Smith

Digitally signed by Ray Smith
Date: 2021.04.30 12:14:09 -04'00'

COPYRIGHT 2005 BRASSTECH, INC. THESE DRAWINGS AND THE DESIGNS DEPICTED HEREIN ARE THE PROPRIETARY PROPERTY OF BRASSTECH. ANY USE OR REPRODUCTION IS SUBJECT TO THE EXPRESS APPROVAL OF BRASSTECH. UNAUTHORIZED USE IS STRICTLY PROHIBITED. ALL RIGHTS RESERVED.

| | | | |
|---|---|---|---|
| TESTING | - | - | - |
| ASSEMBLY | - | - | - |
| PLATING | - | - | - |
| POLISHING | - | NEXT ASSY | USED ON |
| MACHINING | - | APPLICATION | |
| TOOLING FIXTURE # | | REMOVE ALL BURRS AND SHARP EDGES | |

UNITS ARE: INCHES [MM]
TOLERANCES ARE:
FRACTIONS ±1/16" DECIMALS .X ±.1 [2,5] .XX ±.06 [1,5] ANGLES ±1°
(X.XXX) DENOTES CRITICAL DIMS.
ALL THREADS ARE CRITICAL

| | | |
|---|---|---|
| DRAWN | JINSON | 02/02/21 |
| CHECKED | R.S. | 02/02/21 |
| APPROVED | R.S. | 02/02/21 |

**BRASSTECH** INCORPORATED
2001 CARNEGIE AVE.
SANTA ANA, CA 92705
(949) 417-5207

# R/T SPOUT ASM

DWG NO. 3-2577 REV E

SCALE .275 REF. SHEET 1 OF 3

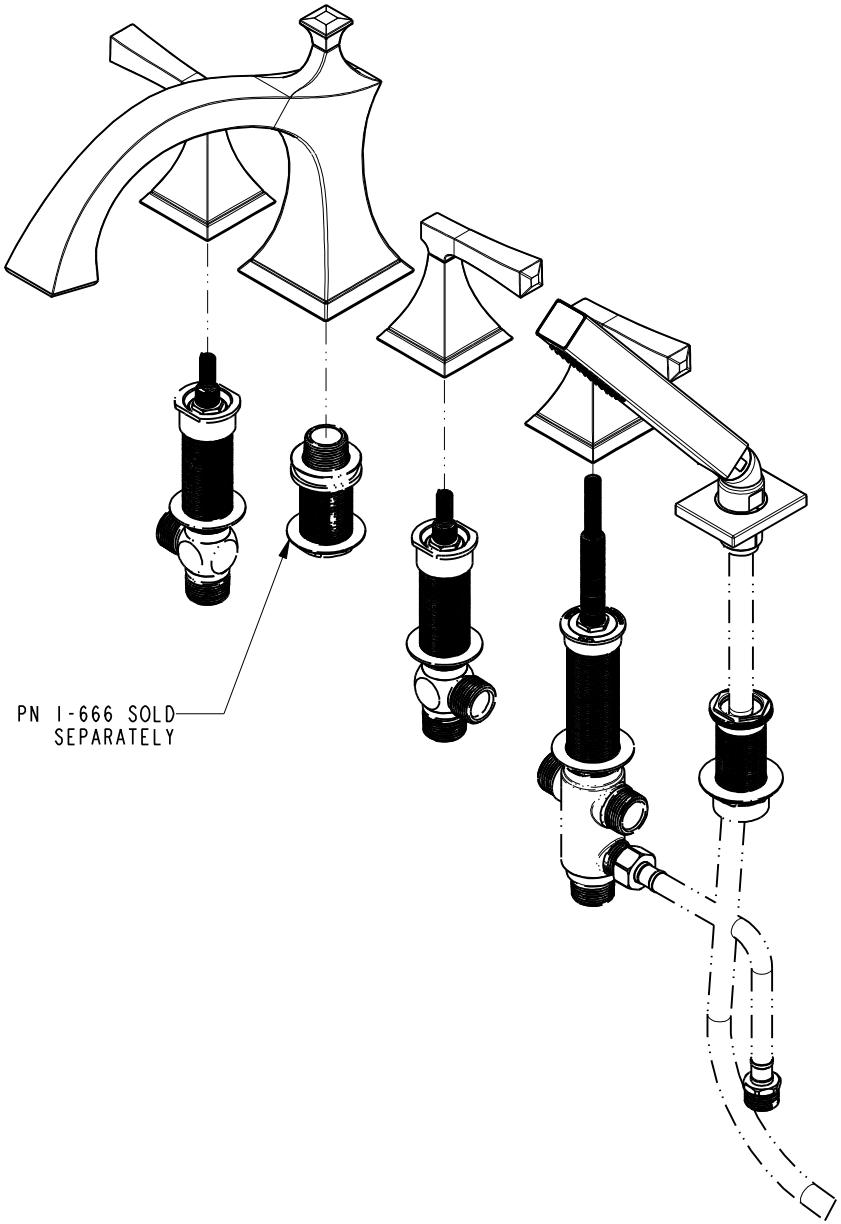


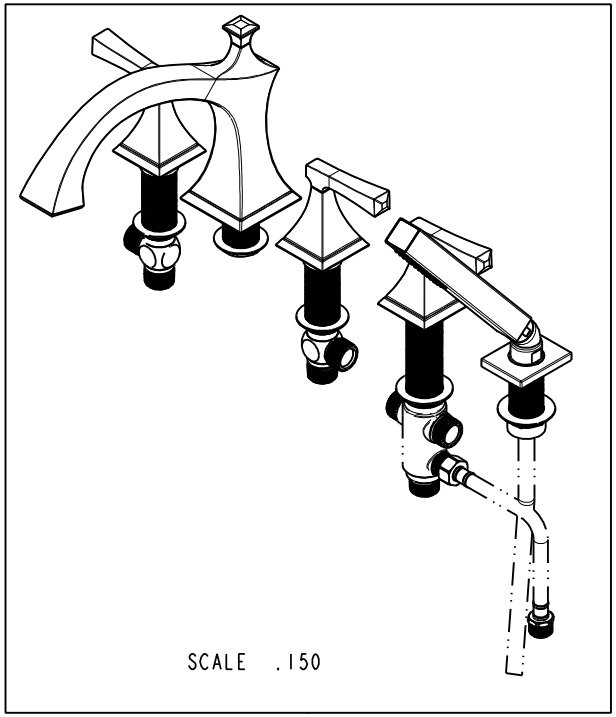


BRASSTECH INCORPORATED
2001 CARNEGIE AVE.
SANTA ANA, CA 92705
(949) 417-5207

| DWG NO. | REV |
|---|---|
| 3-2577 | E |

| SCALE .218 | REF. - | SHEET 2 OF 3 |
|---|---|---|

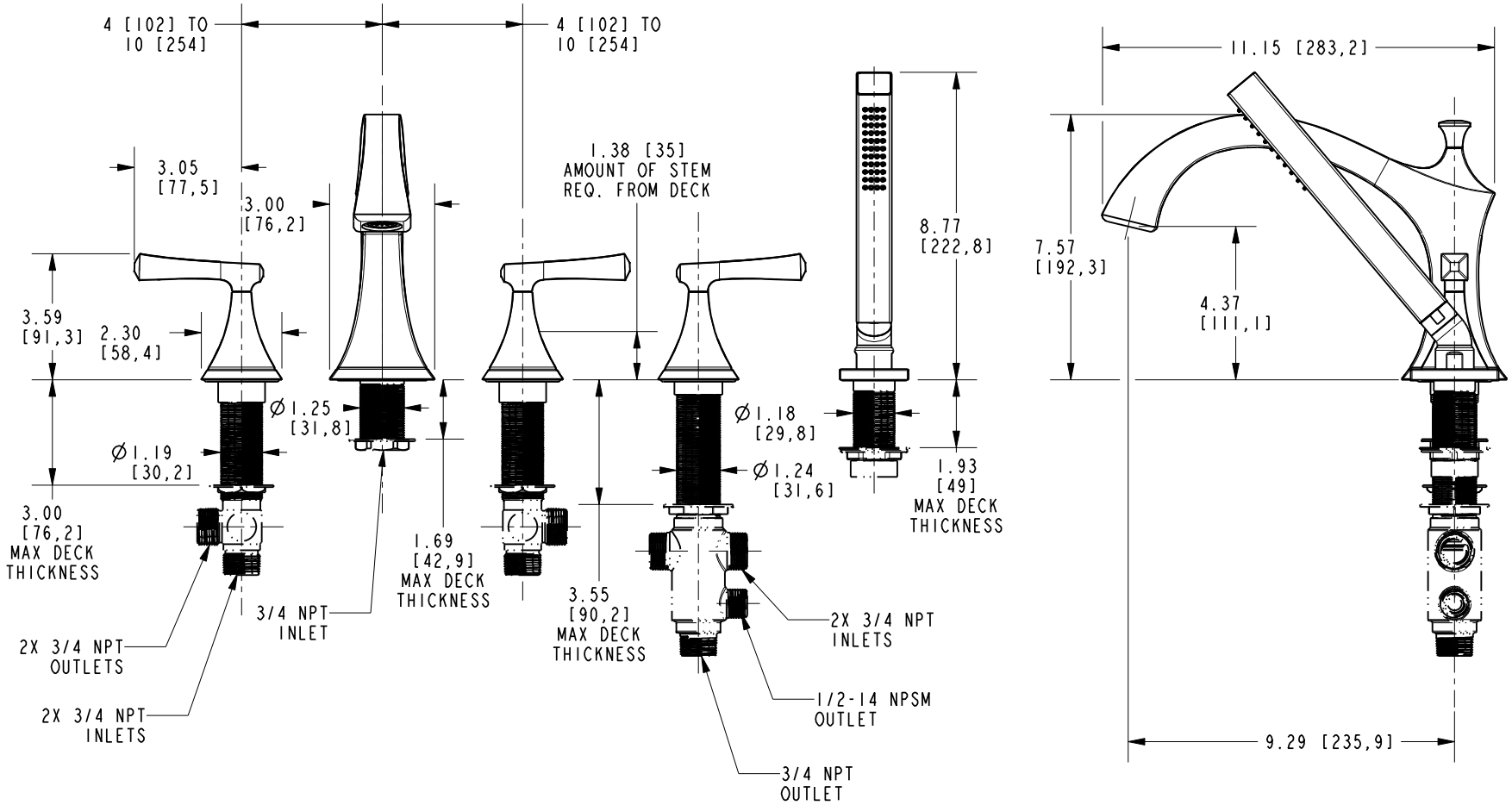


**BRASSTECH** INCORPORATED
2001 CARNEGIE AVE.
SANTA ANA, CA 92705
(949) 417-5207

| DWG NO. | REV |
|---|---|
| 3-2577 | E |

| SCALE .213 | REF. - | SHEET 3 OF 3 |
|---|---|---|