NOTES:

(N1) 1. TO INSPECT ASSEMBLY, FOLLOW FIRST ARTICLE AND IN PROCESS INSPECTION SHEET.

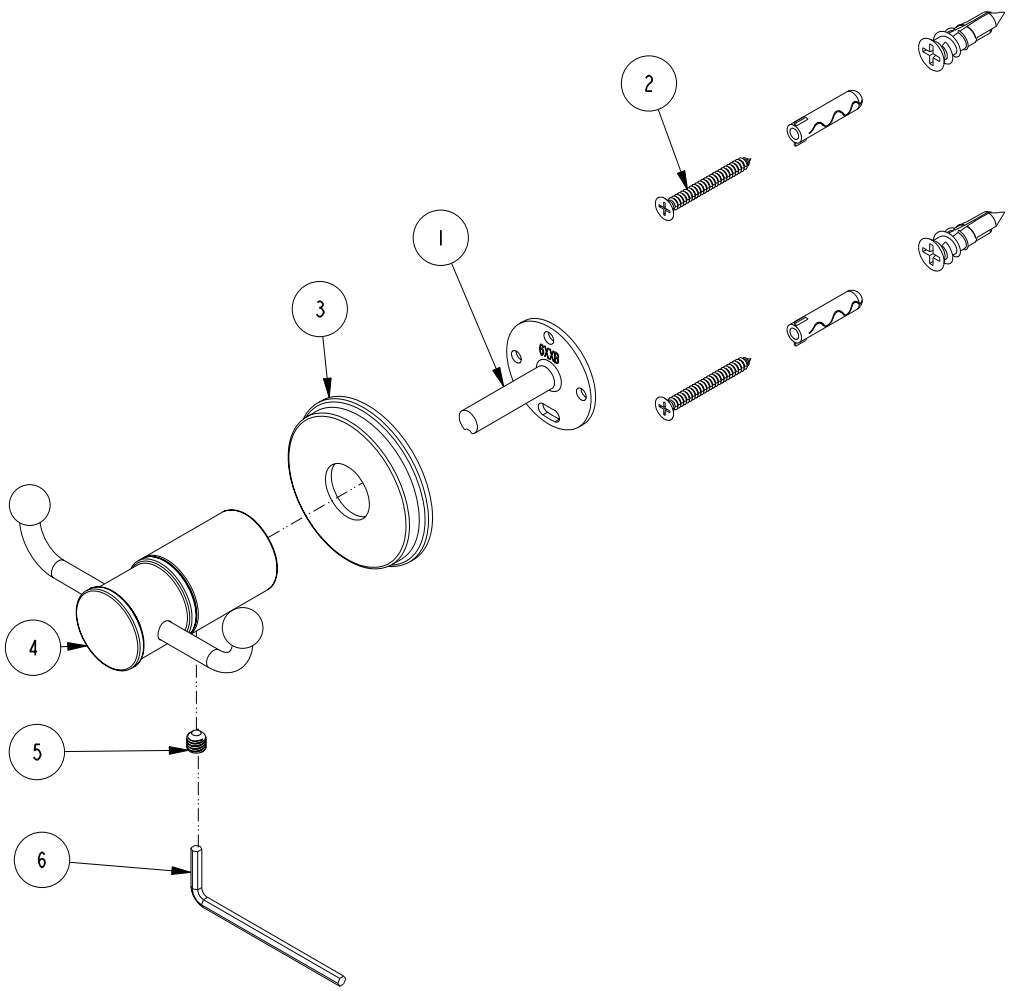

BILL OF MATERIAL (CURRENT LEVEL)

ITEM	PT/ASSY	DESCRIPTION	TYPE	QTY.
1	6XXB	MOUNTING BRACKET	PART	1
2	1-206	HARDWARE PACK	ASSEMBLY	1
3	20-433	ESCUTCHEON ASM	ASSEMBLY	1
4	20-436	DOUBLE HOOK POST ASSY	ASSEMBLY	1
5	92031	SCRW, M6 X 1 X 6 SKT HD CUP PT SS	PART	1
6	10615	HEX KEY, 3MM ALLOY STEEL	PART	1

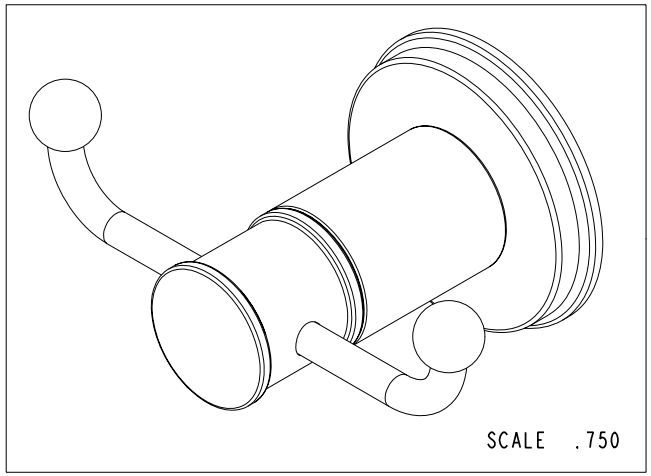

ZONE	REV	DESCRIPTION	DATE	APPROVED
-	B	EN-4300T	06/29/22	R.S.
-	A	EN-4256	09/18/20	J.M.
-	-	EN-3852	05/14/19	J.M.

COPYRIGHT 2005 BRASSTECH, INC. THESE DRAWINGS AND THE DESIGNS DEPICTED HEREIN ARE THE PROPRIETARY PROPERTY OF BRASSTECH. ANY USE OR REPRODUCTION IS SUBJECT TO THE EXPRESS APPROVAL OF BRASSTECH. UNAUTHORIZED USE IS STRICTLY PROHIBITED. ALL RIGHTS RESERVED.

		-	-
TESTING	-	-	-
ASSEMBLY	-	-	-
PLATING	-	-	-
POLISHING	-	NEXT ASSY	USED ON
MACHINING	-	APPLICATION	
TOOLING FIXTURE #		REMOVE ALL BURRS AND SHARP EDGES	

UNITS ARE: INCHES [MM]
TOLERANCES ARE:
FRACTIONS ±1/16" DECIMALS .X ±.1 [2.5] .XX ±.06 [1.5] ANGLES ±1°
(X.XXX) DENOTES CRITICAL DIMS.
ALL THREADS ARE CRITICAL

DRAWN	MANJUNATH	05/14/19
CHECKED	JINSON	05/14/19
APPROVED	J.M.	05/14/19

BRASSTECH INCORPORATED
2001 CARNEGIE AVE.
SANTA ANA, CA 92705
(949) 417-5207

DOUBLE ROBE HOOK

DWG NO. 3270-1660 REV B

SCALE .425 REF. - SHEET 1 OF 2

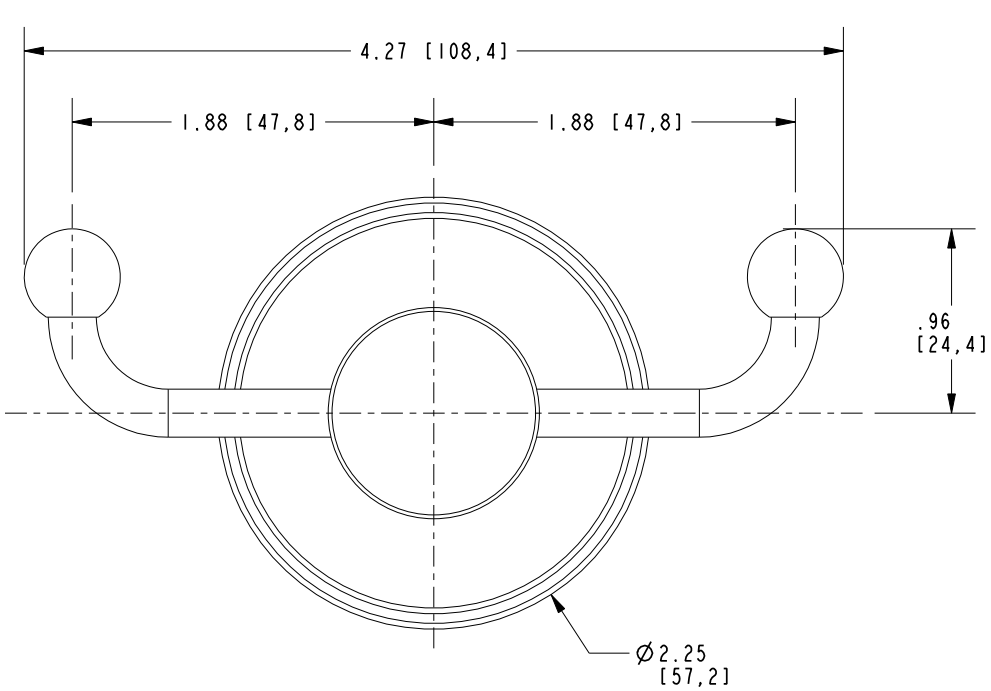

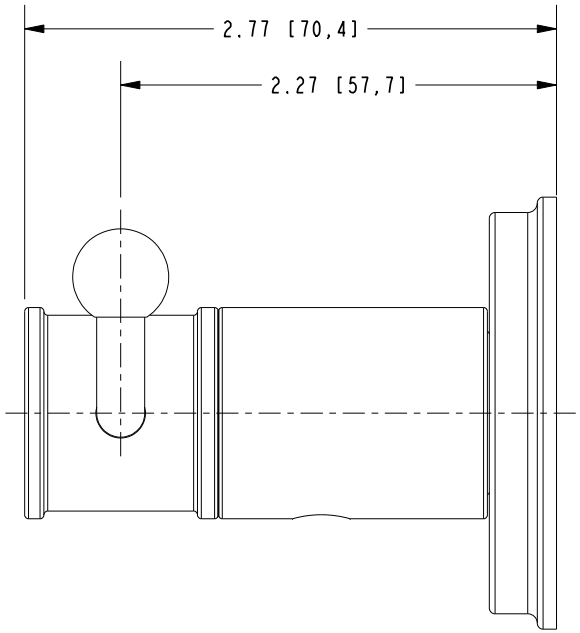

BRASSTECH INCORPORATED
2001 E. CARNEGIE AVE.
SANTA ANA, CA 92705
(949) 417-5207

DWG NO.	REV
3270-1660	B

SCALE	REF.	SHEET
1.000	-	2 OF 2