NOTES:

1. TO INSPECT ASSEBMLY, FOLLOW FIRST ARTICLE AND IN PROCESS INSPECTION SHEET.

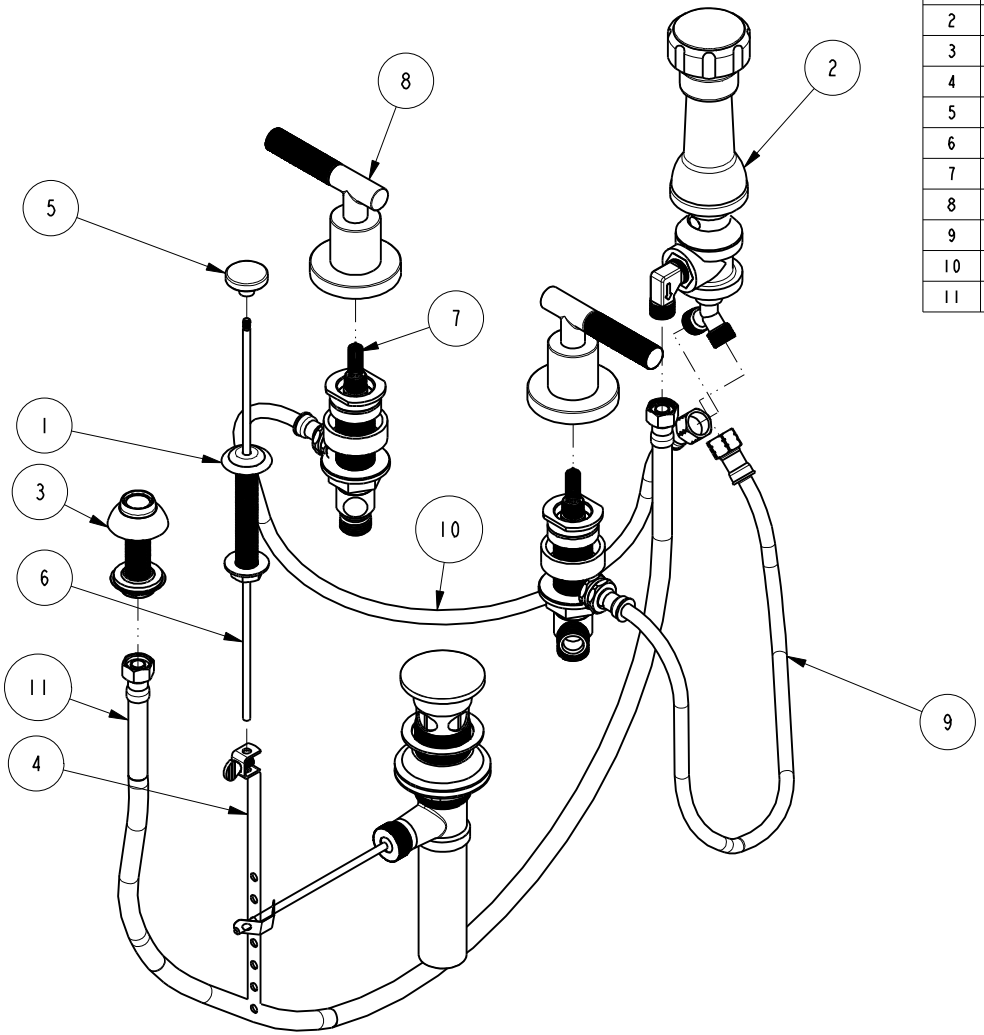

BILL OF MATERIAL (CURRENT LEVEL)

ITEM	PT/ASSY	DESCRIPTION	TYPE	QTY.
1	2-159	POP-UP ROD GUIDE ASSEMBLY	ASSEMBLY	1
2	2-235	BIDET DIVERTER / V. BRE	ASSEMBLY	1
3	2-236	DOUCHE SPRAY ASSEMBLY	ASSEMBLY	1
4	325	POP UP ASSEMBLY	ASSEMBLY	1
5	80080	POP UP KNOB, ROUND	PART	1
6	10288	3/16" POP UP ROD	PART	1
7	1-676	W/S VALVE INSTALLATION	ASSEMBLY	1
8	3-692	LEVER HANDLE W/ESC.	ASSEMBLY	2
9	10612_FIG1	FLEX HOSE 10 IN.	PART	1
10	10612_FIG2	FLEX HOSE 10 IN.	PART	1
11	10613_FIG1	FLEX HOSE 23 IN.	PART	1

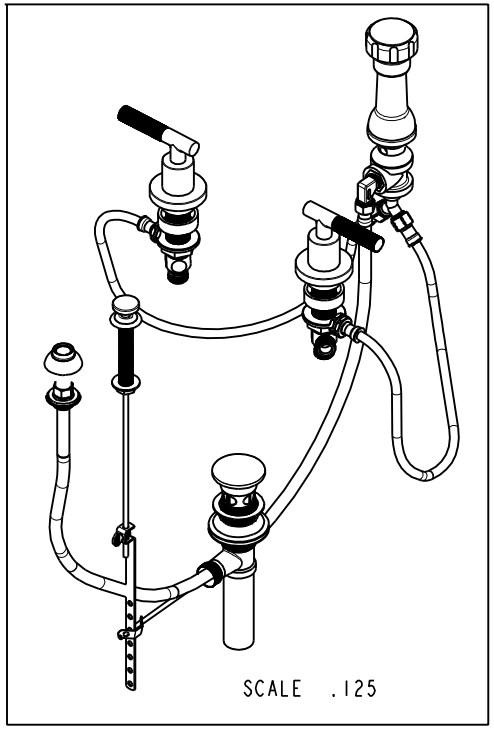

Ray Smith
Digitally signed by Ray Smith
Date: 2021.11.08 16:40:00 -05'00'

ZONE	REV	DESCRIPTION	DATE	APPROVED
-	B	EN-4115a	09/15/21	R.S.
-	A	EN-4372	08/05/21	V.V.
-	-	EN-4115	05/11/20	J.M.

COPYRIGHT 2005 BRASSTECH, INC. THESE DRAWINGS AND THE DESIGNS DEPICTED HEREIN ARE THE PROPRIETARY PROPERTY OF BRASSTECH. ANY USE OR REPRODUCTION IS SUBJECT TO THE EXPRESS APPROVAL OF BRASSTECH. UNAUTHORIZED USE IS STRICTLY PROHIBITED. ALL RIGHTS RESERVED.

		-	-
TESTING	-	-	-
ASSEMBLY	-	-	-
PLATING	-	-	-
POLISHING	-	NEXT ASSY	USED ON
MACHINING	-	APPLICATION	
TOOLING FIXTURE #		REMOVE ALL BURRS AND SHARP EDGES	

UNITS ARE: INCHES [MM]
TOLERANCES ARE:
FRACTIONS ±1/16" DECIMALS .X ±.1 [2,5] .XX ±.06 [1,5] ANGLES ±1°
(X.XXX) DENOTES CRITICAL DIMS.
ALL THREADS ARE CRITICAL

DRAWN	JINSON	09/15/21
CHECKED	R.S.	09/15/21
APPROVED	R.S.	09/15/21

BRASSTECH INCORPORATED
2001 CARNEGIE AVE.
SANTA ANA, CA 92705
(949) 417-5207

BIDET SET

DWG NO. 3299 REV B

SCALE .200 REF. - SHEET 1 OF 2

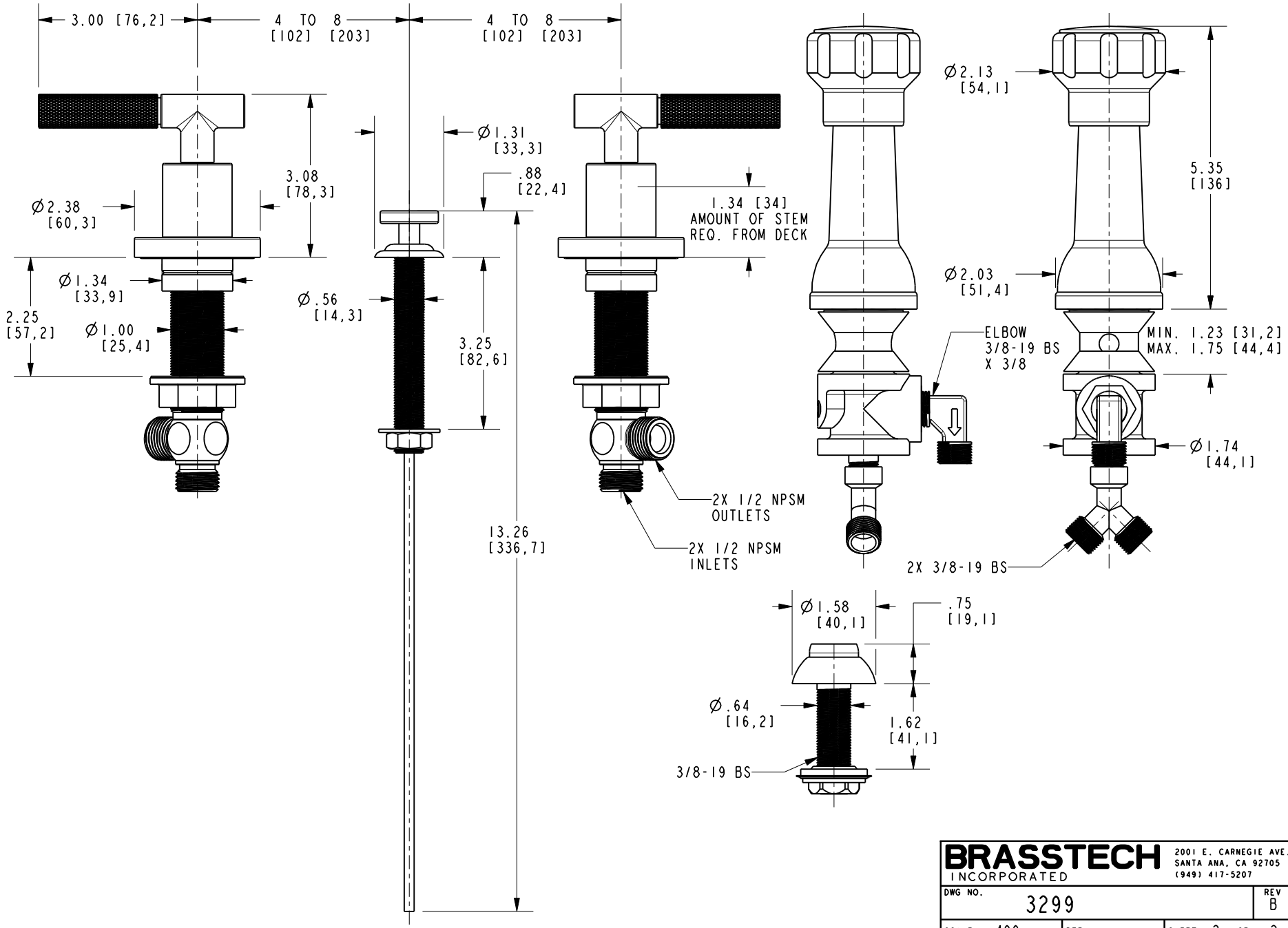

BRASSTECH INCORPORATED
2001 E. CARNEGIE AVE.
SANTA ANA, CA 92705
(949) 417-5207

DWG NO.	REV
3299	B

SCALE	REF.	SHEET
.400	-	2 OF 2