NOTES:

1. TO INSPECT ASSEMBLY, FOLLOW FIRST ARTICLE AND IN PROCESS INSPECTION SHEET.
2. SEAL NUT 10259 IN A PLASTIC BAG AND TAPE TO THE BACK OF THE TRIM PLATE.

BILL OF MATERIAL (CURRENT LEVEL)

ITEM	PT/ASSY	DESCRIPTION	TYPE	QTY.
1	2-661	SHOWER PLATE ASM	ASSEMBLY	1
2	3-561	LEVER HANDLE W/ESC.	ASSEMBLY	1
3	10259	HEX NUT 9/16 X 20 MADE	PART	1

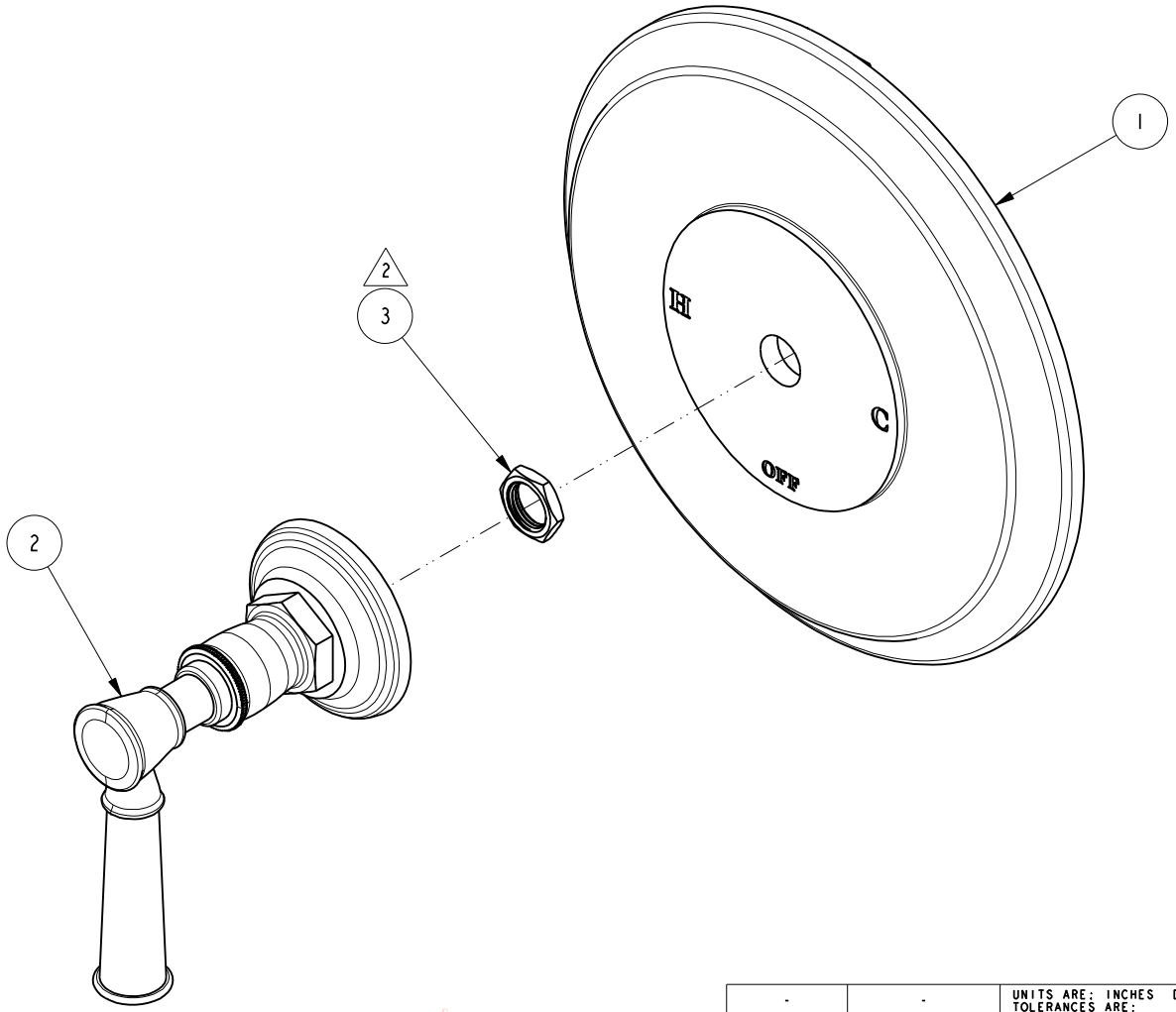

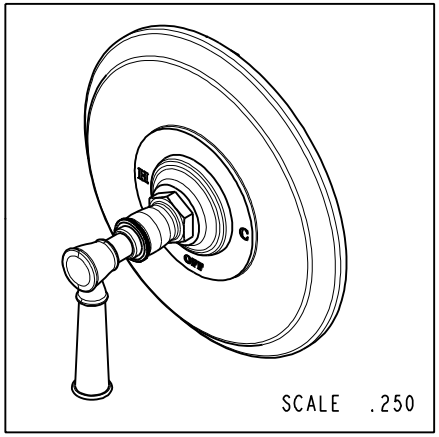

Ned M. Santos Digitally signed by Ned M. Santos Date: 2022.06.28 18:00:40 -07'00'

ZONE	REV	DESCRIPTION	DATE	APPROVED
-	B	EN-4441	04/18/22	N.S.
-	A	EN-4300e	04/28/21	R.S.
-	-	EN-2838c	08/10/15	J.M

COPYRIGHT 2005 BRASSTECH, INC. THESE DRAWINGS AND THE DESIGNS DEPICTED HEREIN ARE THE PROPRIETARY PROPERTY OF BRASSTECH. ANY USE OR REPRODUCTION IS SUBJECT TO THE EXPRESS APPROVAL OF BRASSTECH. UNAUTHORIZED USE IS STRICTLY PROHIBITED. ALL RIGHTS RESERVED.

TESTING	-	-	-
ASSEMBLY	-	-	-
PLATING	-	-	-
POLISHING	-	NEXT ASSY	USED ON
MACHINING	-	APPLICATION	
TOOLING FIXTURE #		REMOVE ALL BURRS AND SHARP EDGES	

UNITS ARE: INCHES [MM]
TOLERANCES ARE:
FRACTIONS ±1/16" DECIMALS .X ±.1 [2,5] .XX ±.06 [1,5] ANGLES ±1°
(X.XXX) DENOTES CRITICAL DIMS.
ALL THREADS ARE CRITICAL

DRAWN	JINSON	04/28/21
CHECKED	R.S.	04/28/21
APPROVED	R.S.	04/28/21

BRASSTECH INCORPORATED
2001 CARNEGIE AVE.
SANTA ANA, CA 92705
(949) 417-5207

B/P SHOWER TRIM LESS SHOWERHEAD ARM AND FLANGE

DWG NO. 4-2914BP REV B

SCALE .500 REF. - SHEET 1 OF 2

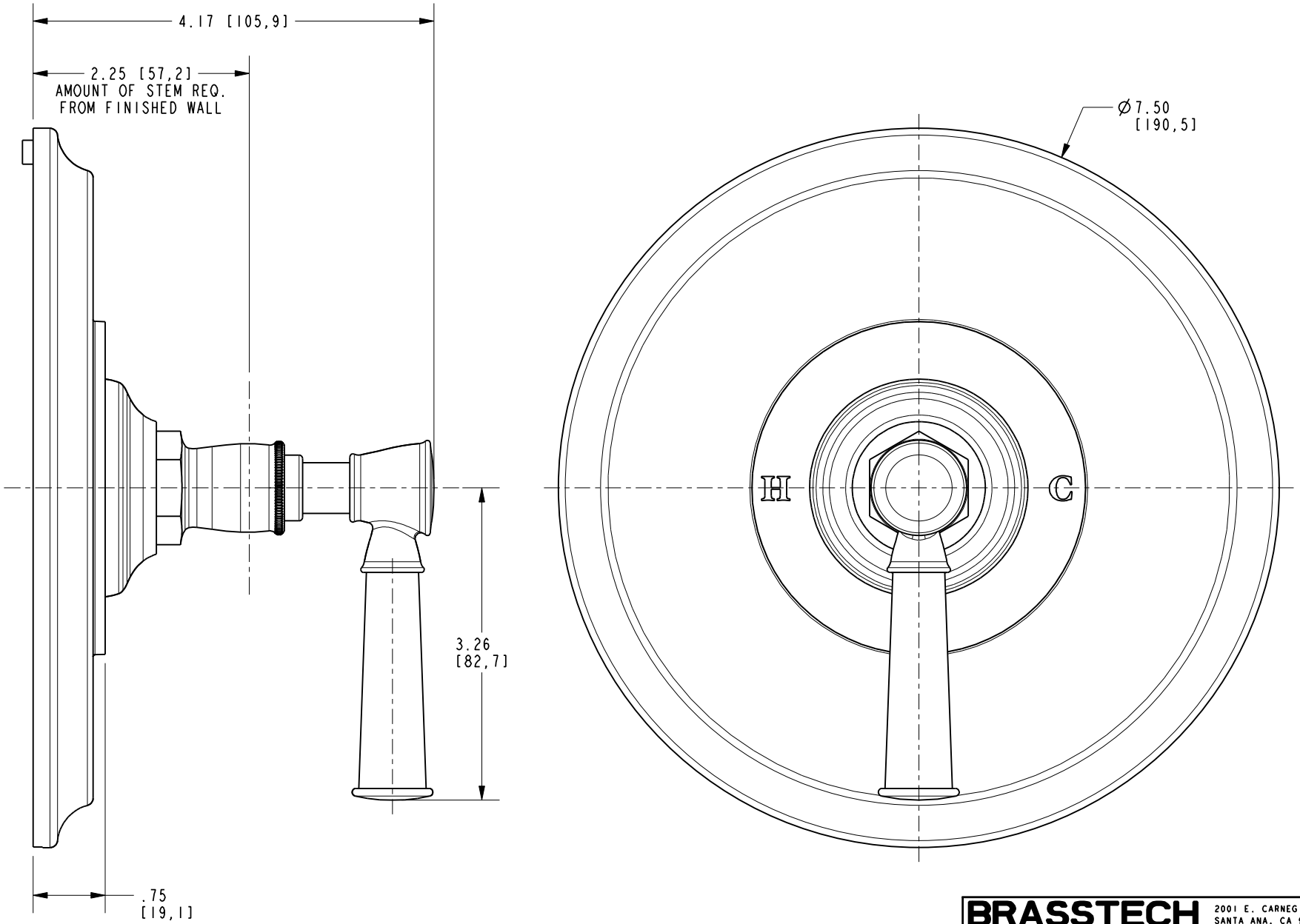

BRASSTECH INCORPORATED

2001 E. CARNEGIE AVE.
SANTA ANA, CA 92705
(949) 417-5207

DWG NO. 4-2914BP		REV B
SCALE .675	REF. -	SHEET 2 OF 2