NOTES:

(N1) 1. FIT / FORM / FUNCTION SHALL FOLLOW PS-E.008.

2. BAG ITEM 11, 1, AND 2.

3. APPLY LOCTITE 680 TO THREADS.

BILL OF MATERIAL (CURRENT LEVEL)

ITEM	PT/ASSY	DESCRIPTION	TYPE	QTY.
1	1-206_47XX	HARDWARE PACK	ASSEMBLY	2
2	10615	HEX KEY, 3MM ALLOY STEEL	PART	1
3	40693	POST LEFT , PIVOT TT HOLDER	PART	1
4	40694	POST RIGHT , PIVOT TT HOLDER	PART	1
5	40695	ARM - DOUBLE POST PIVOT TOILET TISSUE HOLDER	PART	1
6	91098	O-RING, #2-007, EPDM, 65-75 DURO	PART	2
7	91254	POLY BUMPER PAD, DIA .250" X .062"	PART	1
8	91779	WSHR, .220 ID X .315 OD X .030 THK, FLT, ACETAL	PART	1
9	92031	SCRW, M6 X 1 X 6 SKT HD CUP PT W/ SELF LOC SS	PART	2
10	92893	PIVOT SCREW	PART	1
11	6XXB	MOUNTING BRACKET	PART	2

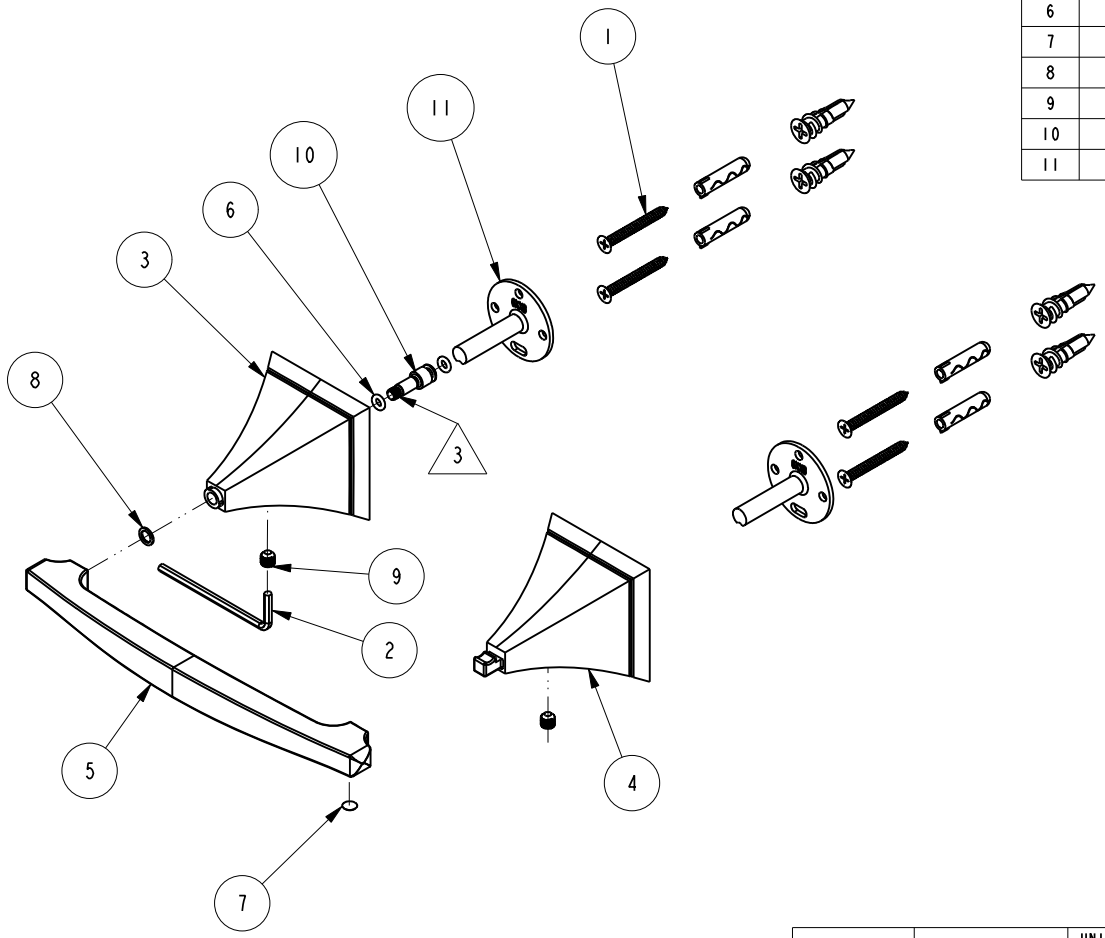

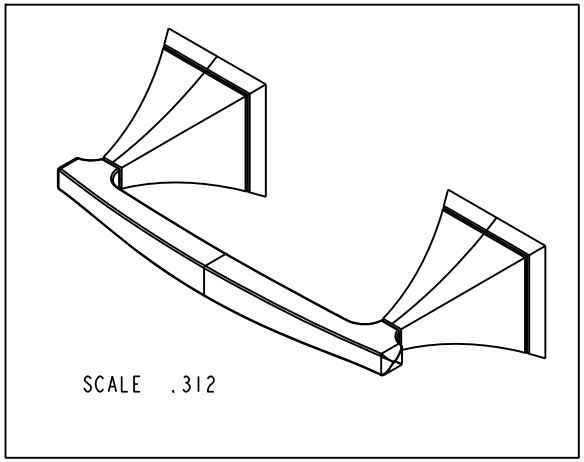

ZONE	REV	DESCRIPTION	DATE	APPROVED
-	B	EN-3735	06/19/19	J.M.
-	A	EN-3148	09/27/16	J.M.
-	-	EN-2087	09/20/13	J.M.

COPYRIGHT 2005 BRASSTECH, INC. THESE DRAWINGS AND THE DESIGNS DEPICTED HEREIN ARE THE PROPRIETARY PROPERTY OF BRASSTECH. ANY USE OR REPRODUCTION IS SUBJECT TO THE EXPRESS APPROVAL OF BRASSTECH. UNAUTHORIZED USE IS STRICTLY PROHIBITED. ALL RIGHTS RESERVED.

TESTING	-	-	-
ASSEMBLY	-	-	-
PLATING	-	-	-
POLISHING	-	NEXT ASSY	USED ON
MACHINING	-	APPLICATION	
TOOLING FIXTURE #		REMOVE ALL BURRS AND SHARP EDGES	

UNITS ARE: INCHES [MM]
TOLERANCES ARE:
FRACTIONS ±1/16" DECIMALS .X ±.1 [2.5] .XX ±.06 [1.5] ANGLES ±1°

(X.XXX) DENOTES CRITICAL DIMS.
ALL THREADS ARE CRITICAL

DRAWN	MANJUNATH	06/19/19
CHECKED	JINSON	06/19/19
APPROVED	J.M.	06/19/19

BRASSTECH INCORPORATED
2001 CARNEGIE AVE.
SANTA ANA, CA 92705
(949) 417-5207

DOUBLE POST PIVOTING TOILET TISSUE HOLDER

DWG NO. 41-28 REV B

SCALE .313 REF. - SHEET 1 OF 2

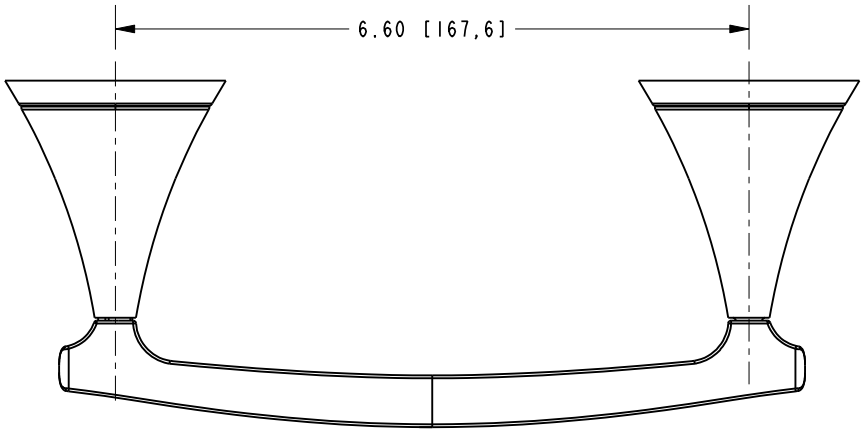

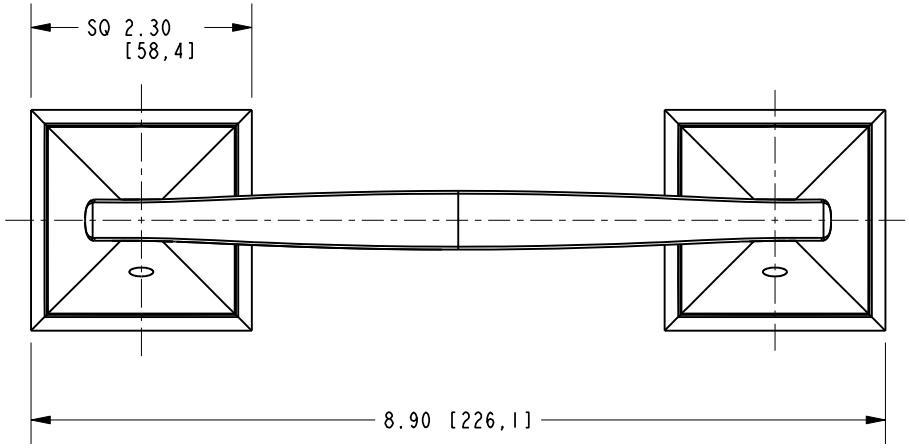

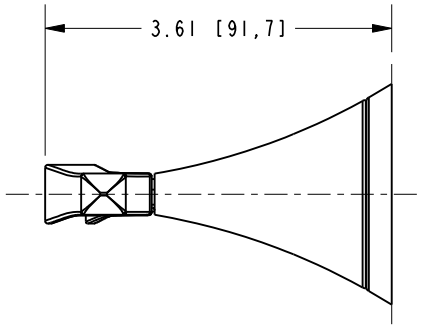

BRASSTECH
INCORPORATED
2001 E. CARNEGIE AVE.
SANTA ANA, CA 92705
(949) 417-5207

DWG NO.	REV
41-28	B

SCALE	REF.	SHEET
.500	-	2 OF 2