California Faucets®

Corsano®

Prep Pull-Out Kitchen Faucet

K51-111-XX

Features

- *Available in 28 finishes including 13 PVD finishes*
- *All brass construction including sprayhead*
- *360° rotating spout*
- *One button control for aerated or spray stream*
- *Spray jets have easy-to-clean surface*
- *Quiet polymer-braided hose with rotating joint*
- *Ceramic disc cartridge*
- *Max flow rate: 1.8 gpm (6.8 L/min)*

K51-111-ST-SN shown

Codes/Standards Applicable

Product meets or exceeds the following:

- *ASME A112.18.1/CSA B125.1*
- *NSF 61, NSF 372, CEC & DOE*
- *Commonwealth of MA*
- *ADA compliant*

XX = Handle Style

Handle Style	A	B	C
FB	8-1/8" [206]	4-1/8" [105]	3-13/16" [97]
BFB	8-1/8" [206]	4-1/8" [105]	3-13/16" [97]
ST	7-11/16" [195]	3-15/16" [100]	3-7/16" [87]
BST	7-11/16" [195]	3-15/16" [100]	3-7/16" [87]

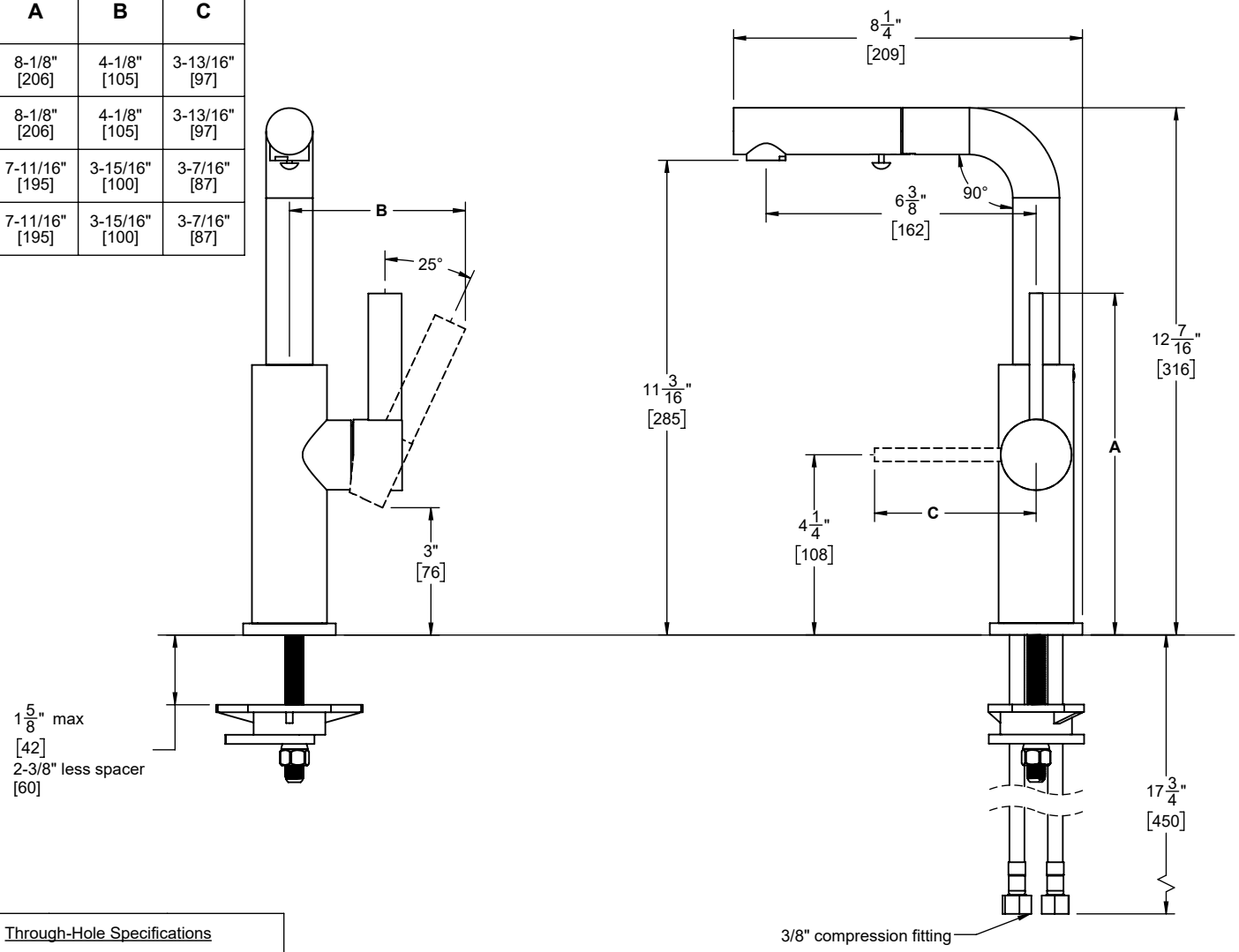

Through-Hole Specifications		
Min	Recommended	Max
∅1-1/4" [32mm]	∅1-3/8" [35mm]	∅1-3/8" [38mm]

Specifications subject to change without notice

Dimensions are inches, rounded to 1/16"
[Dimensions in brackets are mm, rounded to 1mm]