California Faucets®

Descanso™

ROMAN TUB SET TRIM

TO-3008
TO-3008K
TO-3008F

Features
- *Maximum 8-5/8" spout center to center*
- *Spout has easy Quick Connect fitting*
- *16 gpm (60.6 L/min) max flow rate at 60 psi*
- *Requires rough valve (08-75-65) sold separately*
- *Solid brass construction*
- *Over 30 finishes includion 15 PVD finishes*

Codes/Standards
Product meets or exceeds the following:
- *ASME A112.18.1/CSA B125.1*
- *ADA compliant*

(TO-3008K SHOWN)

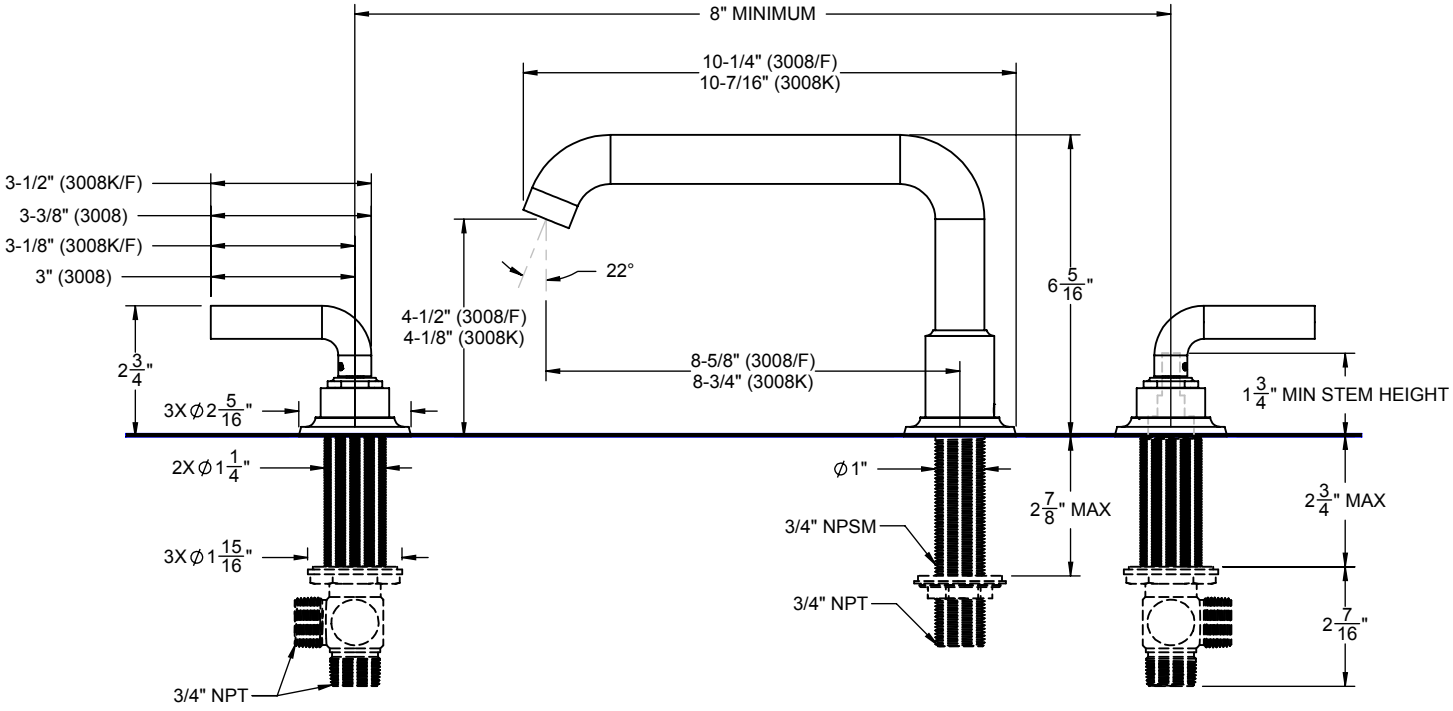

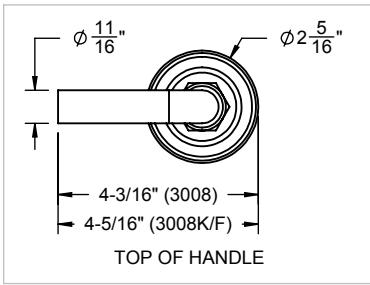

THROUGH-HOLE SPECIFICATIONS			
	MIN	RECOMENDED	MAX
SPOUT:	∅1"	∅1-3/8"	∅1-5/8"
VALVE:	∅1-1/4"	∅1-3/8"	∅1-5/8"

SPECIFICATIONS SUBJECT TO CHANGE WITHOUT NOTICE

ALL DIMENSIONS SHOWN TO NEAREST 1/16"