S19-120BF, S19-120ABF, S19-120SSBF
Barrier-Free Drench Shower w/Horizontal Supply

- Exceeds American National Standard Z358.1 Specifications
- Exceeds European EN 15154-1
- Exceeds Australia/New Zealand AS4775 & AS/NZS 4020
- Easily Mounts to Wall
- Galvanized Steel Protected with BradTect® Safety Yellow Coating
- Universal Identification Sign and Inspection Tag Included
- Full, One-Year Warranty
- SpinTec™ showerheads are covered by one or more of the following patents: 8113446; D594,089; D669,555; Reg. Comm. Des. D001079560-0001. Other patents pending.
- Classified by Underwriters Laboratory Inc. to ANSI Z358.1
- Listed by Intertek to EN 15154-1
- Certified by IAPMO OCEANA to AS4775 and AS/NZS 4020

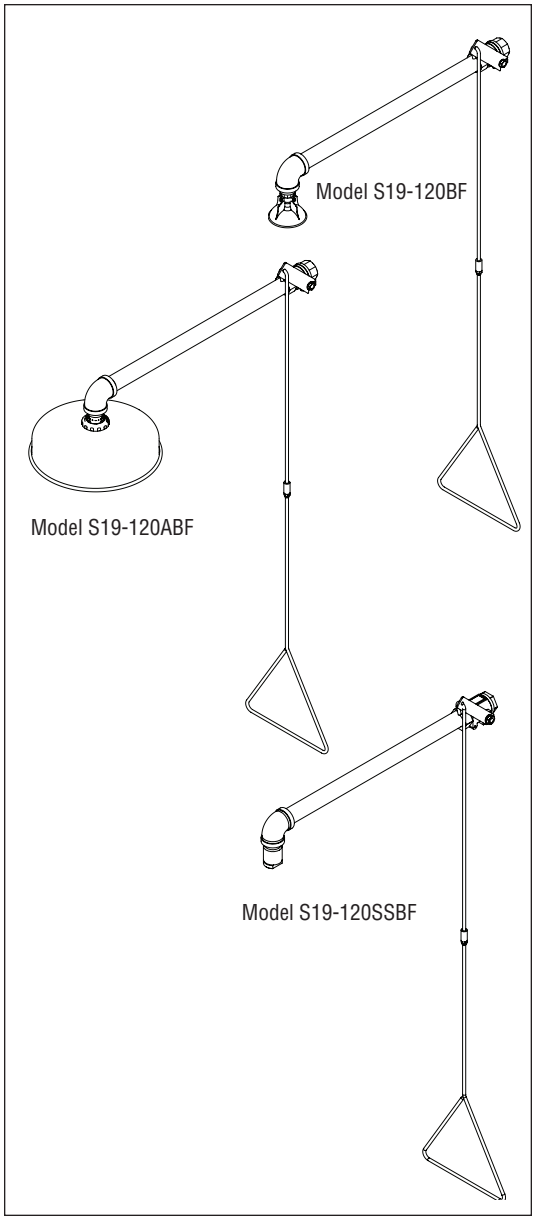

Specifications

Barrier-Free design makes this drench shower unit fully accessible to people with physical disabilities. Bradley meets accessibility codes by ensuring proper placement of shower heads and extended pull rods. Unit saves space and fits easily into any work environment. Shower valve operates quickly by an extended pull rod with a triangular handle.

Drench shower is designed to accommodate standard 8' ceiling height. ANSI Z358.1 compliant drench showers are mounted between 82"–96" from the lower edge of the showerhead or shroud to the floor.

This plumbing fixture is not intended to dispense water for human consumption through drinking or for preparation of food or beverages.

Model	Description
☐ **S19-120BF**	Barrier-Free Drench Shower w/Horizontal Supply, Plastic Showerhead
☐ **S19-120ABF**	Barrier-Free Drench Shower w/Horizontal Supply, Plastic Showerhead with Stainless Steel Shroud
☐ **S19-120SSBF**	Barrier-Free Drench Shower w/Horizontal Supply, All-Stainless Steel Fixture
☐ **S19-120SSBFZ**	Barrier-Free Drench Shower w/Horizontal Supply, All-Stainless Steel Fixture with BSPP Connections/Certified to AS4775 & AS4020
☐ **S19-2100**	Navigator EFX25 - Emergency Thermostatic Mixing Valve

Recommended Option:

Navigator S19-2100 EFX25
Emergency Thermostatic Mixing Valve

NAVIGATOR

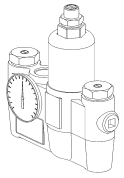

Satisfies ANSI Z358.1
tepid water requirements.

This information is subject to change without notice.

© 2015 Bradley
P.O. Box 309, Menomonee Falls, WI 53052-0309
800 BRADLEY (800 272 3539) +1 262 251 6000
bradleycorp.com

Standard Equipment

SpinTec™ Showerhead

Standard showerhead is 3.1" (78.7mm) diameter highly visible yellow impact-resistant plastic (Model S19-120ABF includes a 10¾" [273mm] diameter corrosion-resistant stainless steel shroud). High performance corrosion-resistant stainless steel showerhead measures 1½" (38mm) in diameter (Model S19-120SSBF only). SpinTec drench showerhead features integral 22 GPM (83.3 L) flow control, conserving water and helping to accurately size your tepid water system.

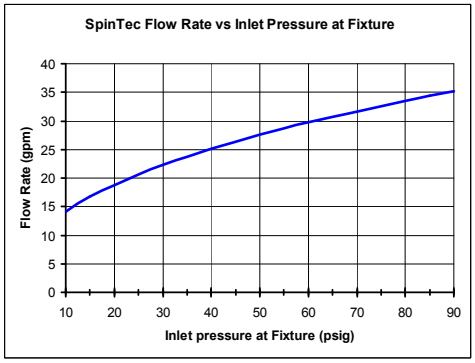

Valve

Chrome-plated brass 1" NPT stay-open ball valve, operated by stainless steel pull rod with triangular handle. Model S19-120SSBF is all stainless steel.

Pipe and Fittings

Galvanized steel with BradTect® safety yellow coating. S19-120SSBF is all stainless steel.

Water Supply

1" NPT Horizontal.

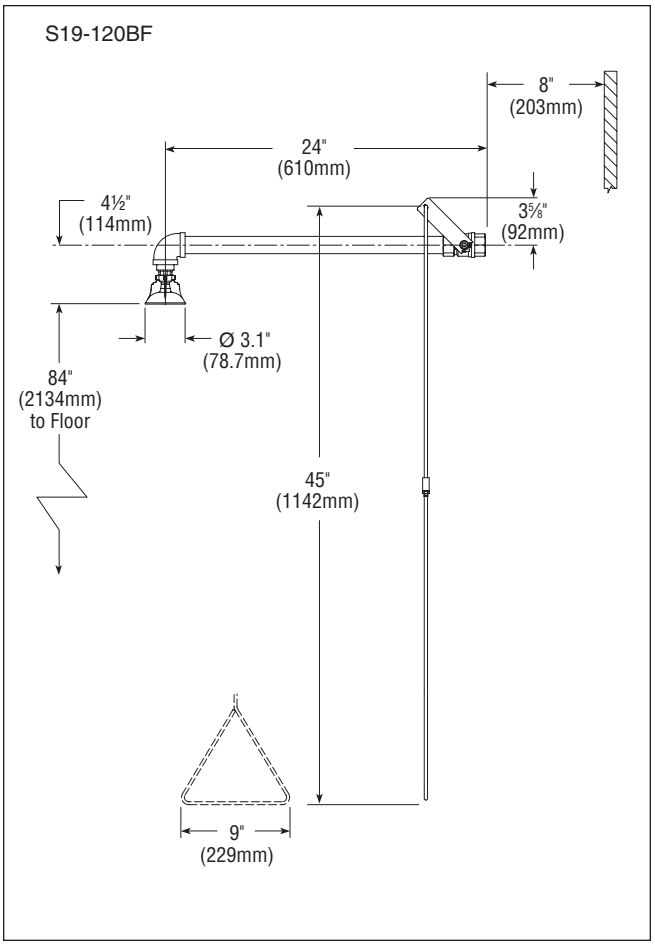

All dimensions assume standard thread engagement. Variations in manufacturing allow for +/- ⅛" (3mm) per threaded joint. To find the tolerance of a dimension, add the number of thread joints in between a dimension and multiply it by ⅛" (3mm).

© 2015 Bradley
P.O. Box 309, Menomonee Falls, WI 53052-0309
800 BRADLEY (800 272 3539) +1 262 251 6000
bradleycorp.com

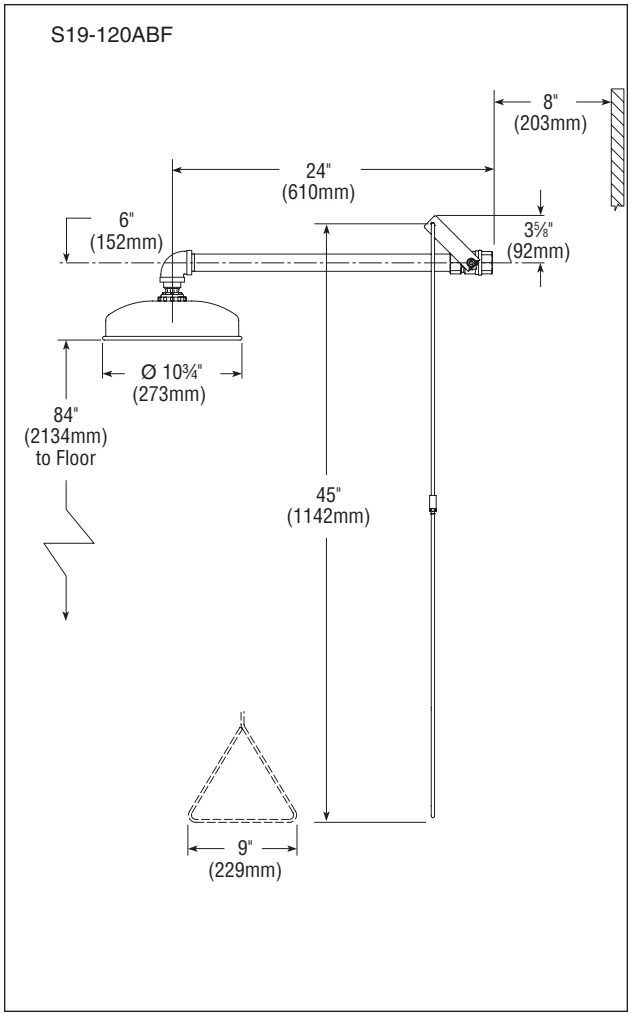

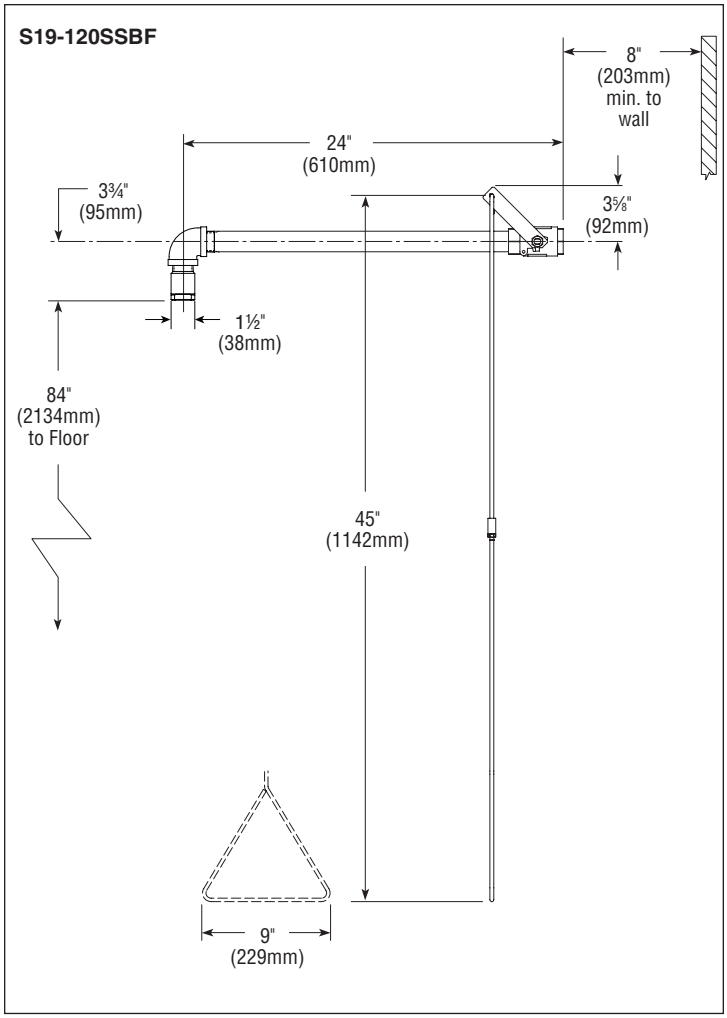

All dimensions assume standard thread engagement. Variations in manufacturing allow for +/- ⅛" (3mm) per threaded joint. To find the tolerance of a dimension, add the number of thread joints in between a dimension and multiply it by ⅛" (3mm).

© 2015 Bradley
P.O. Box 309, Menomonee Falls, WI 53052-0309
800 BRADLEY (800 272 3539) +1 262 251 6000
bradleycorp.com