☐ Model 6334

- ☑ Lavatory-Mounted
- ☑ Pump-Type Valve
- ☑ 3½" Spout
- ☑ ADA Compliant
- ☑ For Use on Lav Decks With a Minimum ½" Thickness

Product Materials

PLUNGER AND FLANGE ASSEMBLIES: heavy chrome-plated brass.
SHANK: molded ABS plastic.
PUMP ASSEMBLY: molded clear ABS plastic.
VALVE COMPONENTS: Celcon, Buna-N rubber or stainless steel.
SOAP BOTTLE: translucent polyethylene. 16 oz. capacity.

Operation

Depress piston for measured amount of liquid soap. Fills from top by unlocking and withdrawing piston and spout assembly using special key provided. The 6334 will dispense vegetable or coconut oil liquid soaps, synthetic detergents, and antiseptic solutions in a liquid form. Spout is fixed.

☑ Bradley liquid soap valves operate best with any vegetable oil or coconut oil hand soap having a 10–15% soap concentration.

Installation

Mount dispenser in 1¼" diameter hole in lavatory or countertop. Include dispenser mounting hole location in lavatory specifications or mount in unused faucet hole.

Guide Specification

Lavatory-mounted liquid soap dispenser manufactured of chrome-plated brass and molded ABS plastic. Valve shall dispense measured amount of vegetable or coconut oil liquid soap, synthetic detergents, or antiseptic solutions. Servicing is facilitated by use of special wrench.

ADA Compliant

- ☑ Consult local and national accessibility codes for proper installation guidelines.
- ☑ Conformity and compliance to local and national codes is the responsibility of the installer.

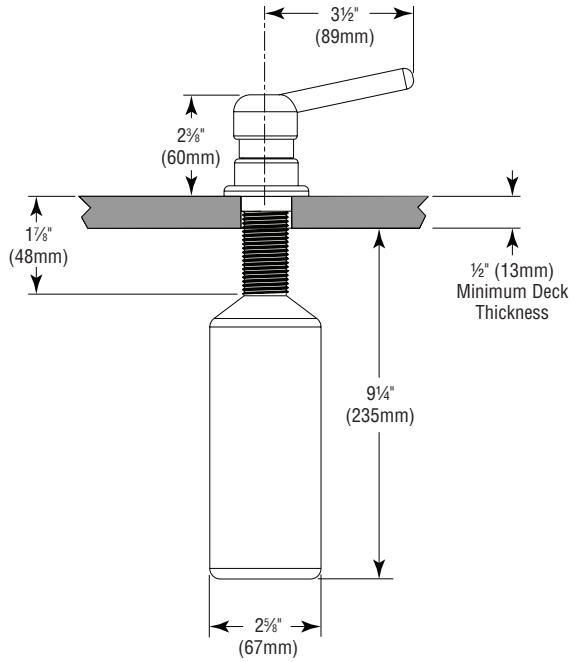

© 2014 Bradley
P.O. Box 309, Menomonee Falls, WI 53052-0309
800 BRADLEY (800 272 3539) +1 262 251 6000
bradleycorp.com