9933, 9934

Utility Shelf

- ○ Model 9933 – 4 Hooks/3 Holders ***Bradex®***
- ○ Model 9934 – 5 Hooks/4 Holders

Product Materials

SHELF AND BRACKET: 18 gauge stainless steel with exposed surfaces in architectural satin finish.

HOOKS: 14 gauge stainless steel

HOLDERS: spring-activated rubber cams on plated steel retainers. Will hold a mop or broom handle with a diameter between 5/8" and 1".

Operation

Weight of mop or broom holds handle in place.

Installation

Verify all rough-in dimensions prior to installation. Secure to wall with mounting screws (included) at holes provided.

Guide Specification

Surface mounted utility shelf shall be fabricated of 18 gauge stainless steel in satin finish. Hooks shall be of 14 gauge stainless steel. Holders shall be with spring-activated rubber cams.

Dimensions (mm)

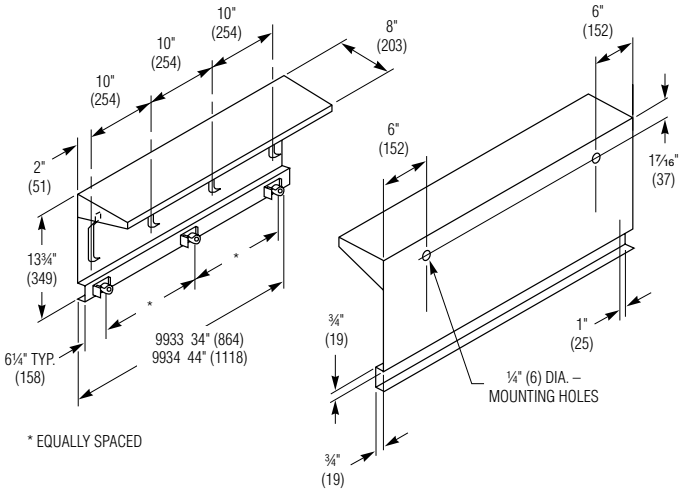

Orders composed of products indicated as ***Bradex®*** will be available to ship in three days after receipt of order at the factory. There is no pricing penalty for this service from Bradley.

View Latest Version

This information is subject to change without notice.

Bradley_UtilityShelf_9933_34

© 2021 Bradley

P.O. Box 309, Menomonee Falls, WI 53052-0309
800 BRADLEY (800 272 3539) +1 262 251 6000
bradleycorp.com