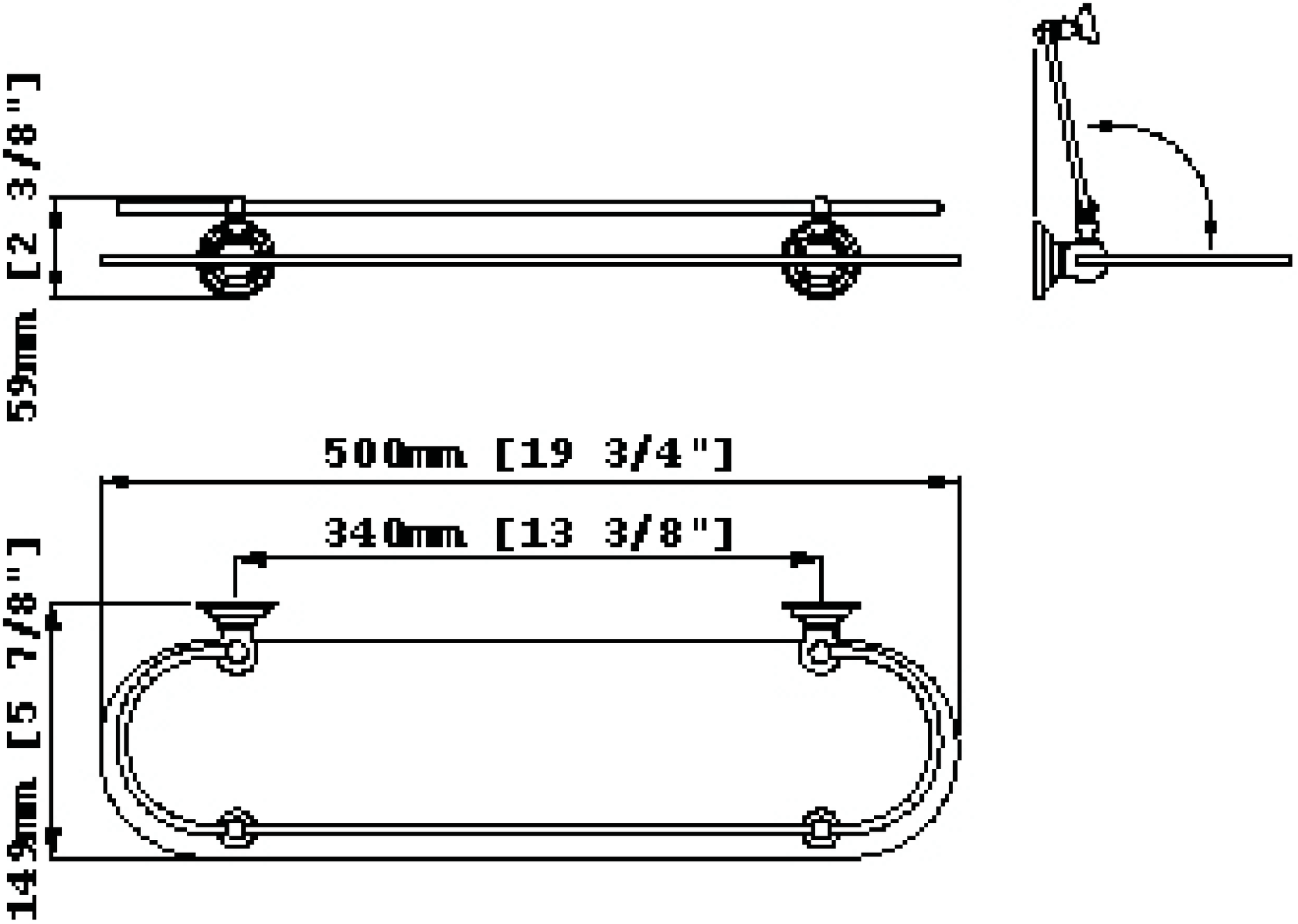
59mm [2 3/8"]
500mm [19 3/4"]
340mm [13 3/8"]
149mm [5 7/8"]