780-210-HD-79

REVISION: 04/01/17

TEMPLATE FOR FULL SURFACE CONTINUOUS GEARED ALUMINUM HINGE

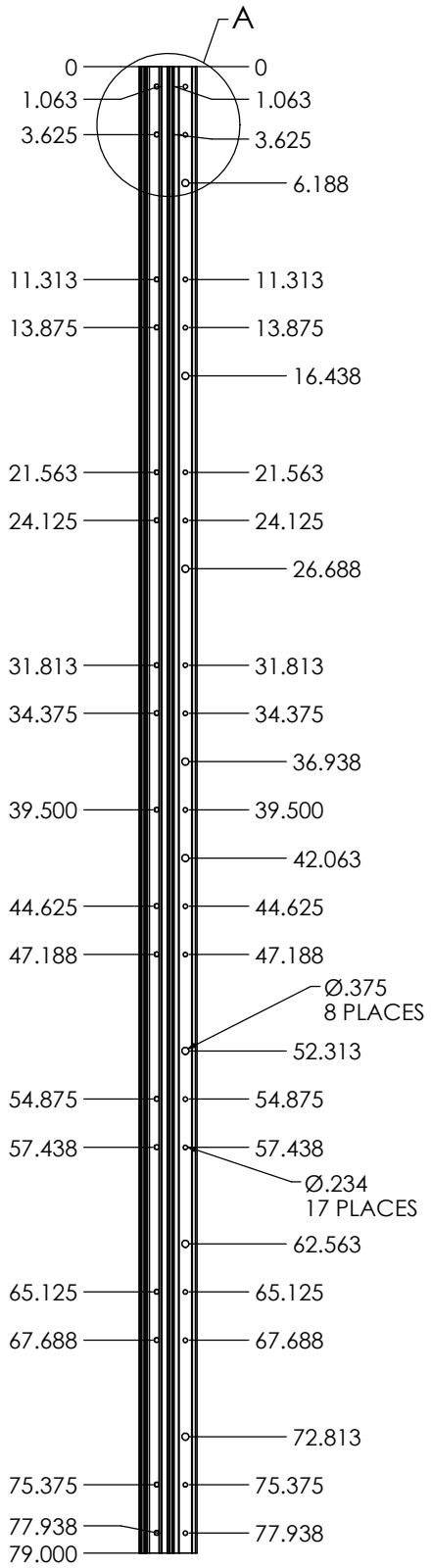

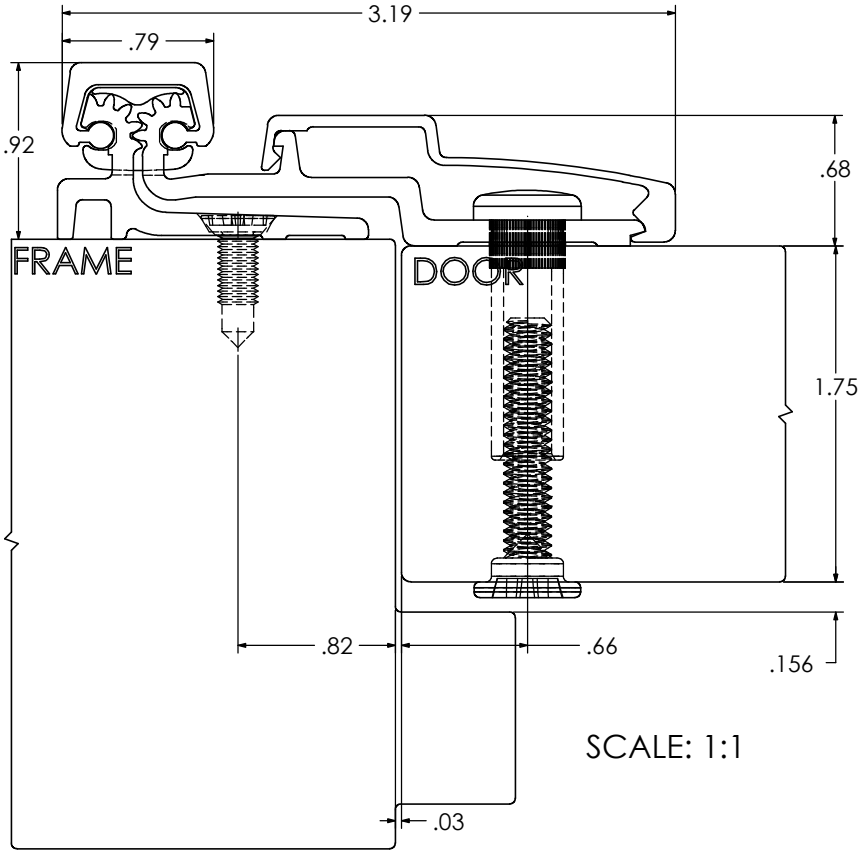

SCALE: 1:1

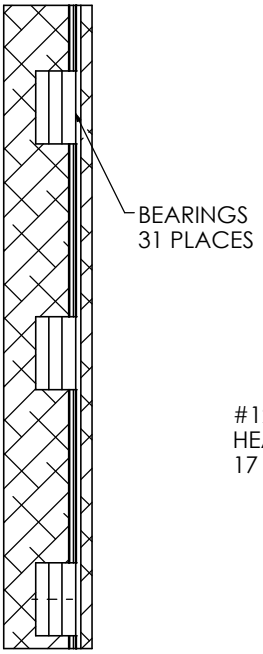

SECTION B-B
SCALE 1 : 2

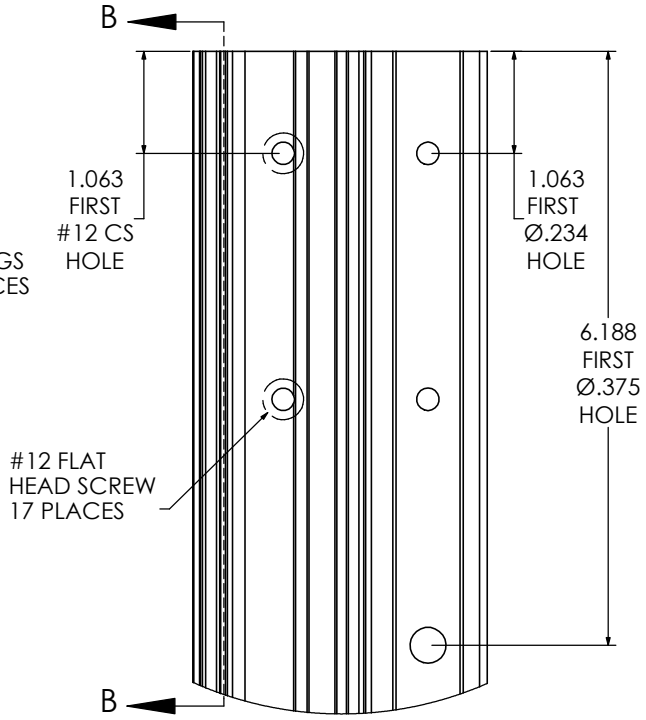

DETAIL A
SCALE 1 : 2