Passage Spring Latch—Interior/Exterior
(Not Applicable to Edge Collection)

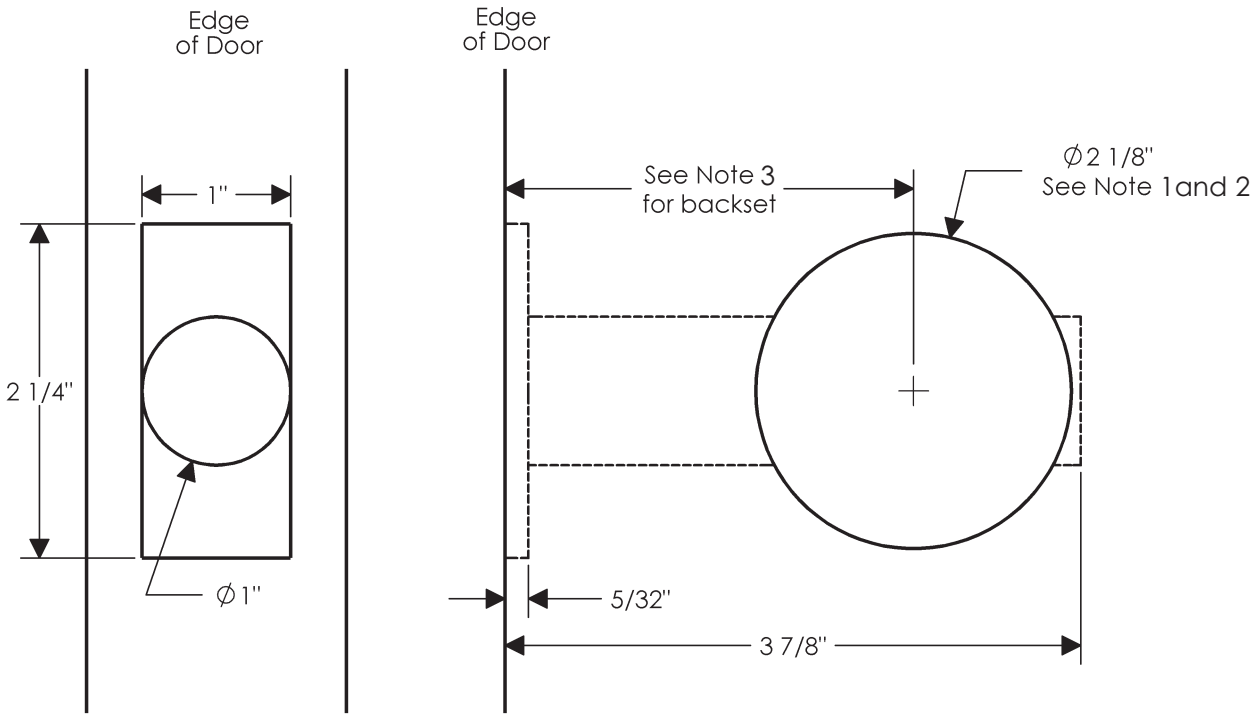

Notes:

1. This face bore does not work for E101, E103, E201, E202, E204, E205, E206, E210, E415, E416, E417, E418, E589, E820, E828, E10520, E10820, E10871, E30303, E30802, and E30803. These escutcheons require a 7/8” face bore.
2. This face bore does not work for E10010 or E10015. These escutcheons require a 1 5/8” face bore offset 1/8” down from center of spring latch.
3. This bore specification is applicable for 2 3/8” or 2 3/4” backset spring latches.