Shower - MEM
WATER POINTS Body spray - Dark Brass matte
Article number: 36 515 979-16

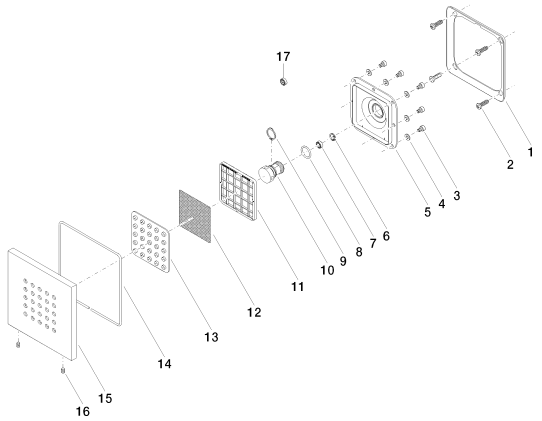

Spare parts list

Number	Item Number	Designation	Number of units
1	09 28 01 024 90	Mounting bracket -	1
2	09 30 31 022 90	Mounting bracket -	4
3	09 30 30 031 90	Mounting bracket -	8
4	09 30 11 024 90	Washer -	8
5	09 12 12 205 90	Mounting bracket -	1
6	09 16 01 016 90	Ring -	1
7	09 23 01 032 90	Application -	1
8	09 14 10 130 90	Washer -	1
9	09 16 01 017 90	Ring -	1
10	09 17 11 146 90	Wall connection -	1
11	09 17 97 057 90	Holder -	1
12	09 29 30 043 90	Application -	1
13	09 12 01 075 90	Application -	1
14	09 14 03 117 90	Washer -	1
15	09 27 98 004-16	rosette	1
16	09 31 11 048 90	Mounting bracket -	1
17	09 23 01 052 90	Application -	1