Gatco Fine Bathware
"The Finishing Touch"

1390, 1391, 1392

General specifications

Premier Table Mirror

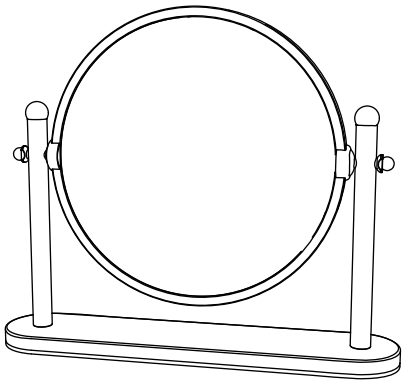

#1390 (Polished Brass)
#1391 (Chrome)
#1392 (Satin Nickel)

- Mirror rotates 360˚
- 3x magnification on one side