CL100 Striker Machining Detail

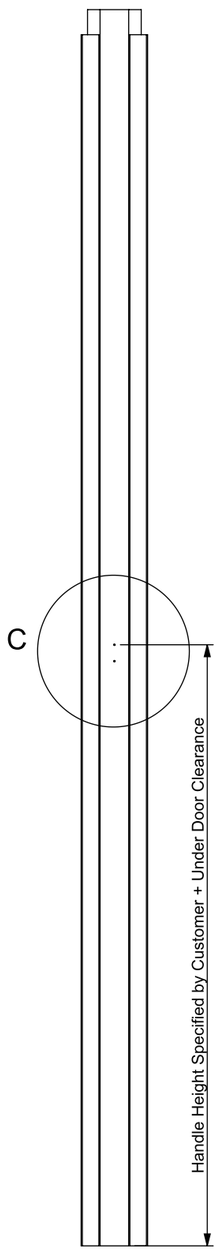

DETAIL D
SCALE 1 : 5

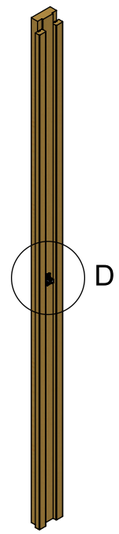

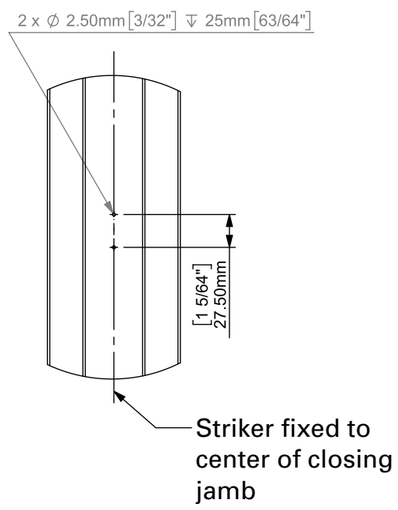

DETAIL C
SCALE 1 : 5

CL100 Handle Only Machining Detail

Works for: CL100B5002

CaviLock®
Quality Sliding Door Hardware
548 Finney Ct, Gardena, CA 90248
Phone (888) 466 0030
Fax (310) 769 5824
www.cavitysliders.com

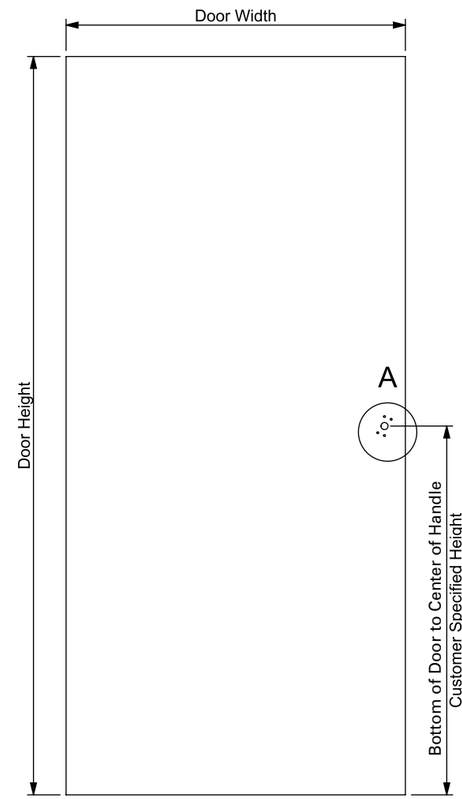

Left Side

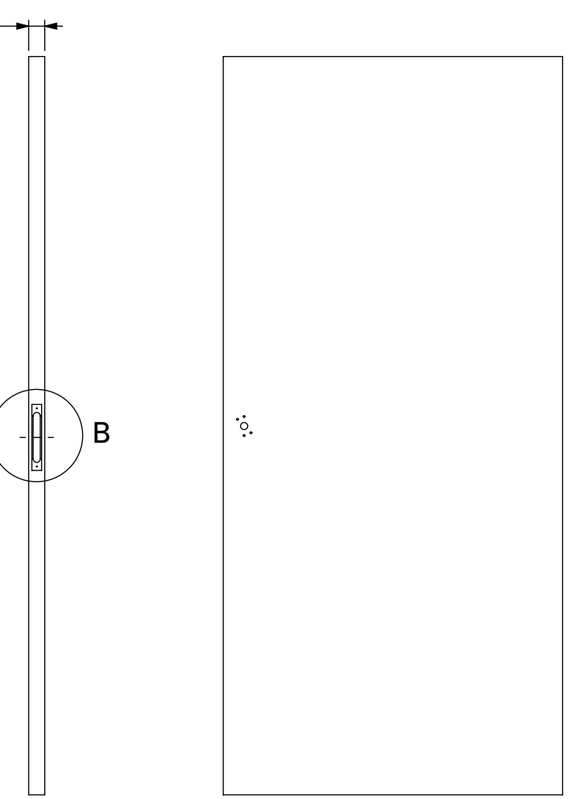

Right Side

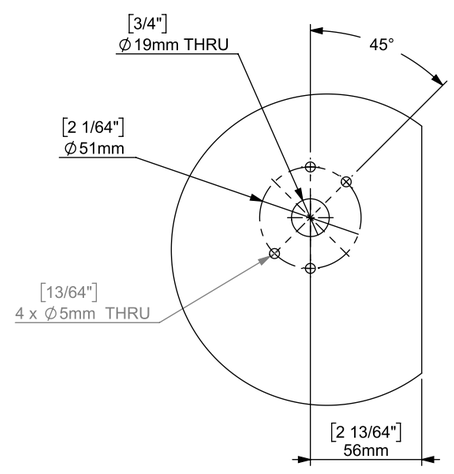

DETAIL A
SCALE 1 : 3

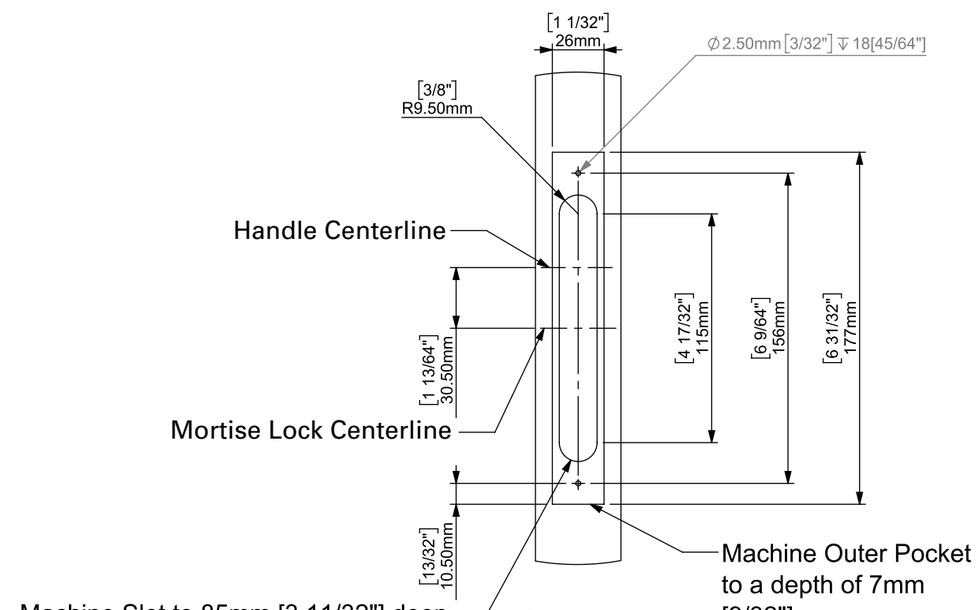

DETAIL B
SCALE 1 : 3

CL100 Striker Machining Detail

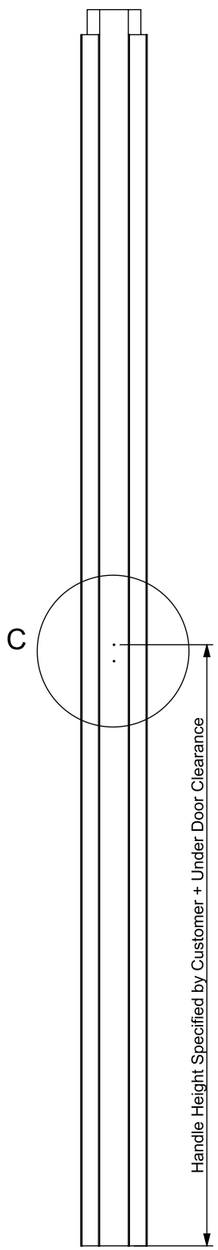

DETAIL D
SCALE 1 : 5

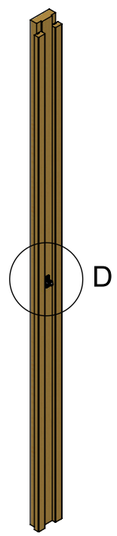

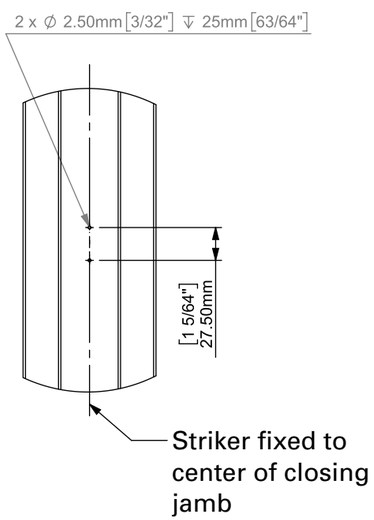

DETAIL C
SCALE 1 : 5

CL100 Handle with Locking One Side Machining Detail
Works for: CL100A7056

CaviLock®
Quality Sliding Door Hardware
548 Finney Ct, Gardena, CA 90248
Phone (888) 466 0030
Fax (310) 769 5824
www.cavitysliders.com

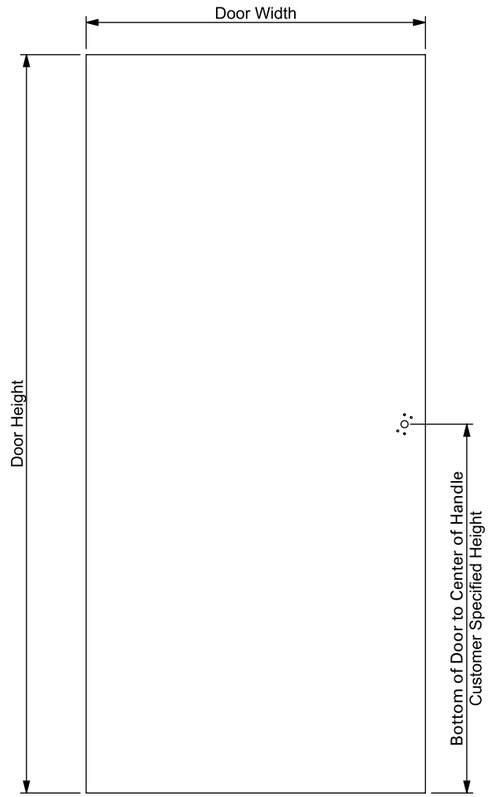

Left Side

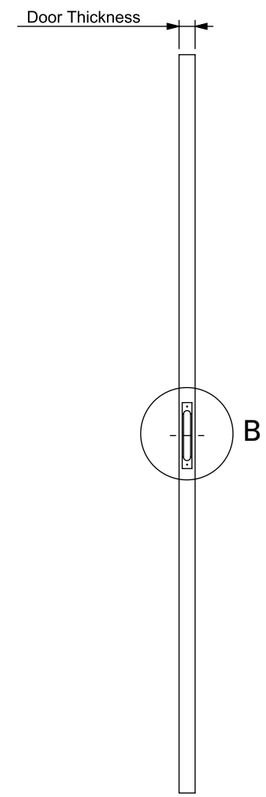

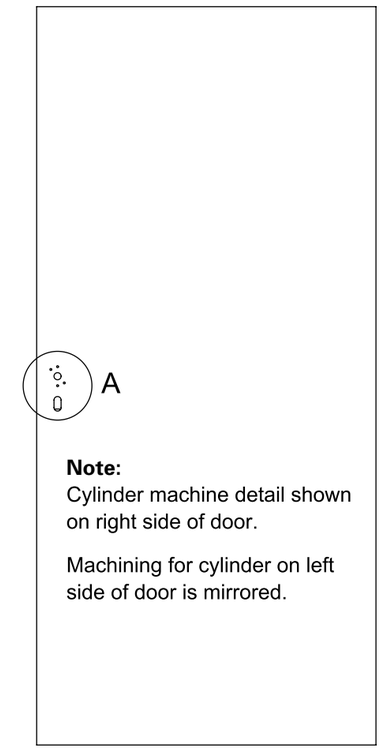

Note:
Cylinder machine detail shown on right side of door.

Machining for cylinder on left side of door is mirrored.

Right Side

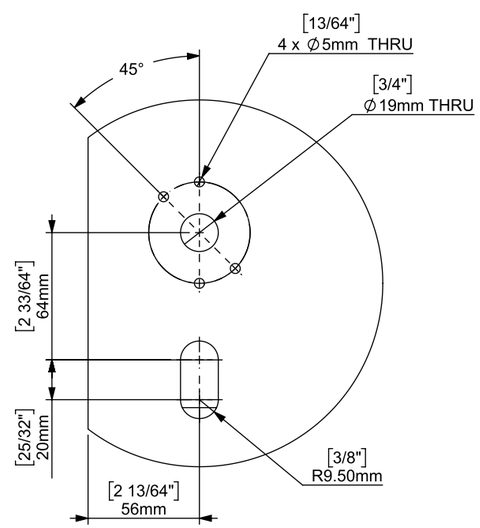

DETAIL A
SCALE 1 : 3

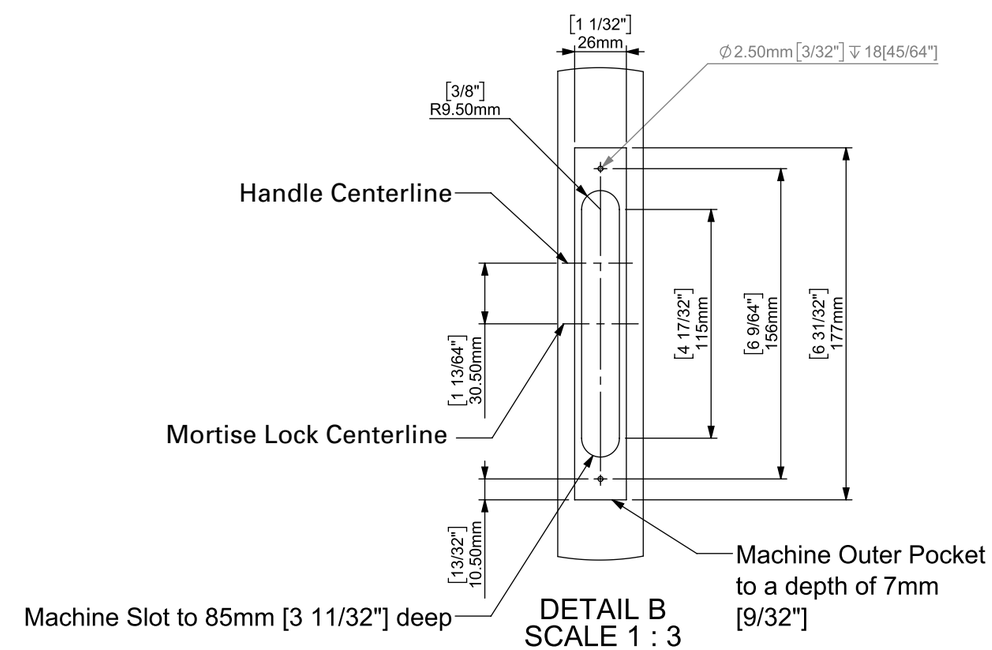

DETAIL B
SCALE 1 : 3

CL100 Striker Machining Detail

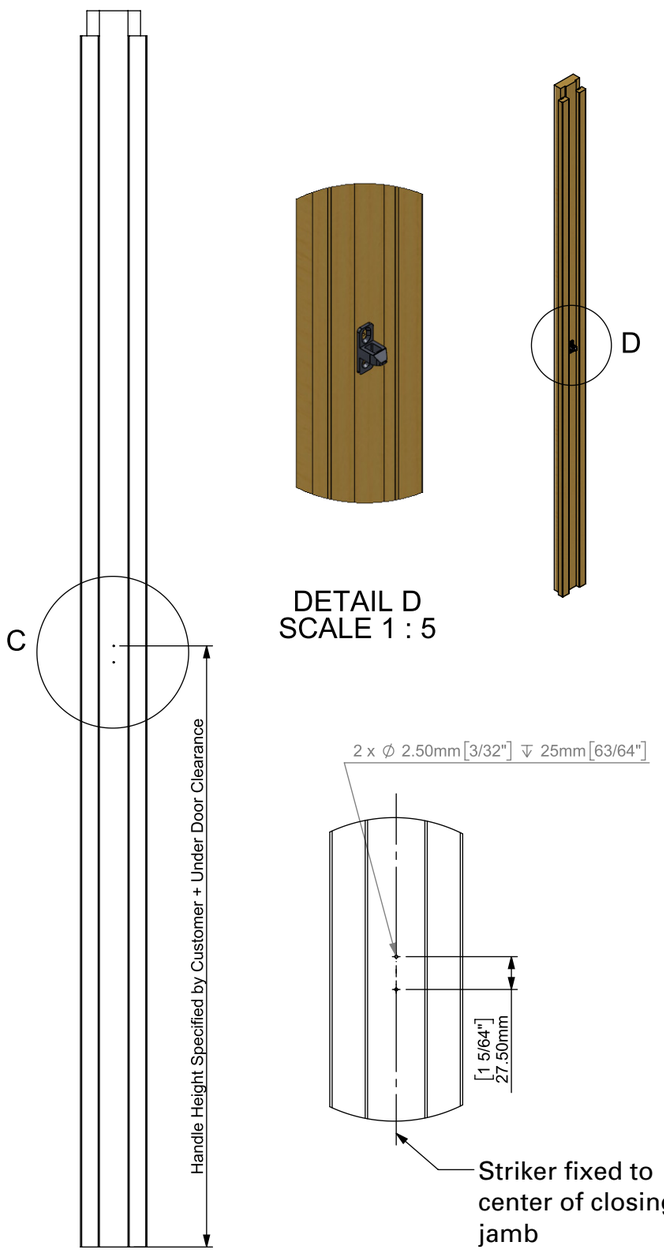

DETAIL C
SCALE 1 : 5

CL100 Handle with Locking Both Sides Machining Detail

Works for: CL100A7054 / CL100A7058 / CL1007014 / CL100A7018 / CL100A7020

CaviLock®
Quality Sliding Door Hardware
548 Finney Ct, Gardena, CA 90248
Phone (888) 466 0030
Fax (310) 769 5824
www.cavitysliders.com

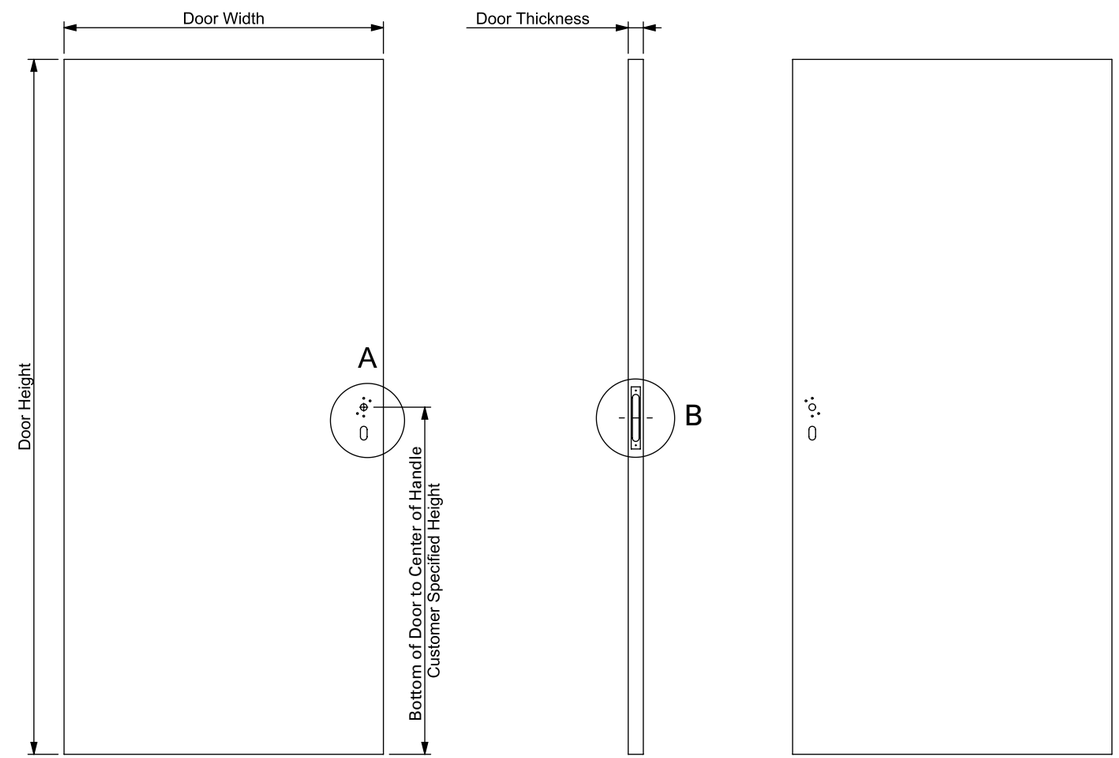

Left Side

Right Side

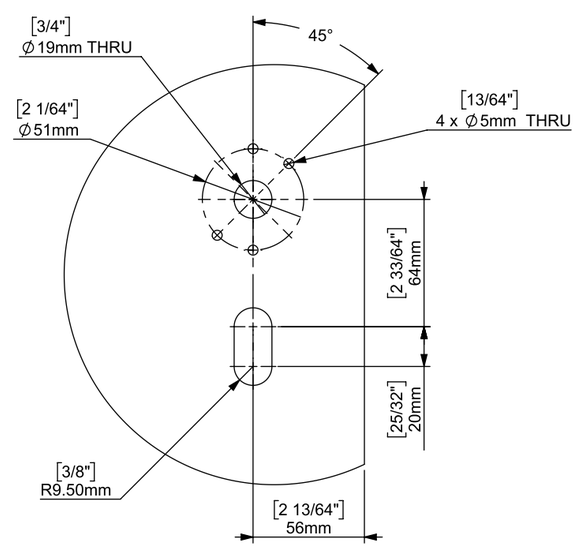

DETAIL A
SCALE 1 : 3

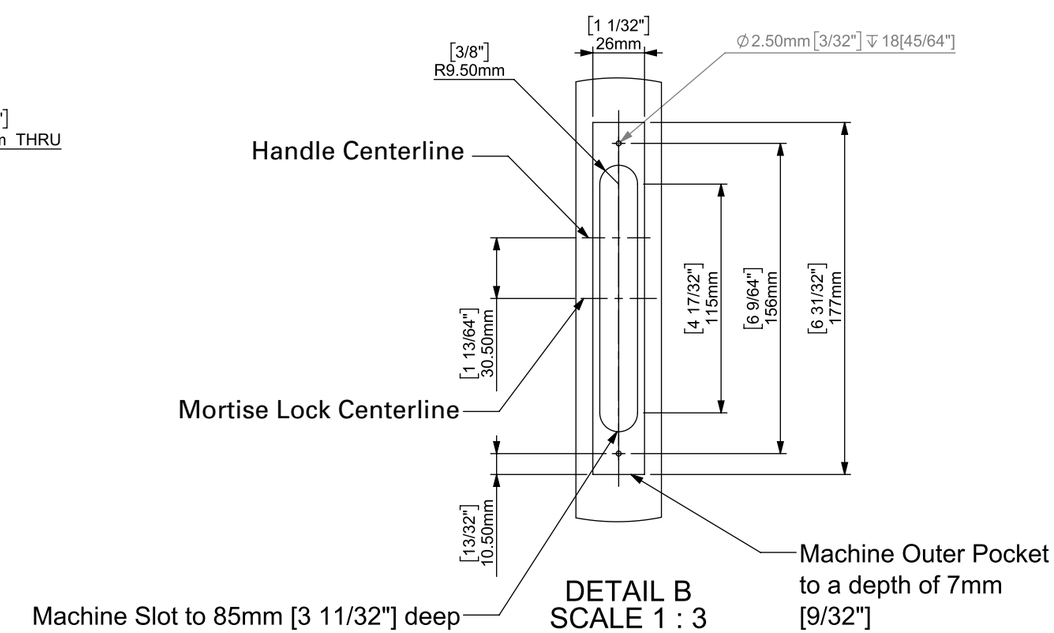

DETAIL B
SCALE 1 : 3